Product Data Sheet

1157 57 Series Caster Series

MRC (Transparent) Wheel Diameter × Wheel Width 150 x 40mm

EAN

KS-11570600074031

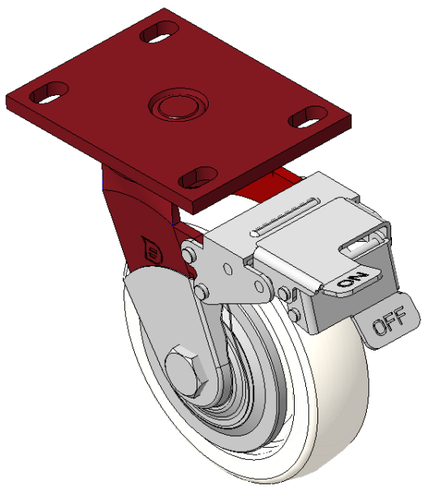

Picture may differ from original product

Equipped with front brake, With locking system Casters, Welded Caster Fork.
Red paint finish, Mounting Type - Top Plate, 110x75mm Bolt Hole Spacing.
Reinforced Polypropylene, natural Wheel Tread color.
Ball Bearing bearings, with specially designed anti-winding wheel caps.

Wheel surface: Thermoplastic (PA6)
Wheel Center: Thermoplastic (PA6)

Drawings are for reference only and may differ from the product

Technical Data

◉ Imperial ○ Metric

Wheel Diameter	6 "
Wheel Width	1-5/8 "
Wheel Bearing	Wheels With Ball Bearings
Plate Size	5-1/2 " x 4-5/16 "
Bolt Hole Spacing	4-5/16 " x3”
Plate Hole	7/8 " x 9/16 "
Offset	1-11/16 "
Swivel Interference	12-11/16 "
Overall Height	7-7/8 "
Swivel Radius	6-3/8 "
Hardness Of Tread	75±5° Shore D
Load Capacity (Dynamic)	882lbs
Load Capacity (Static)	1323lbs
Temperature	-4°F to +176°F
Fork Type	Swivel Caster With Front Brake
Stainless	N/A
Electrical Conductivity	N/A
Anti-Static	N/A
Weight	7.7lbs
Standard	ISO22883

Advantages at a glance

Rolling Resistance	● ● ● ● ●
Operating Noise	● ● ○ ○ ○
Floor Surface Preservation	● ● ○ ○ ○

Dimensions

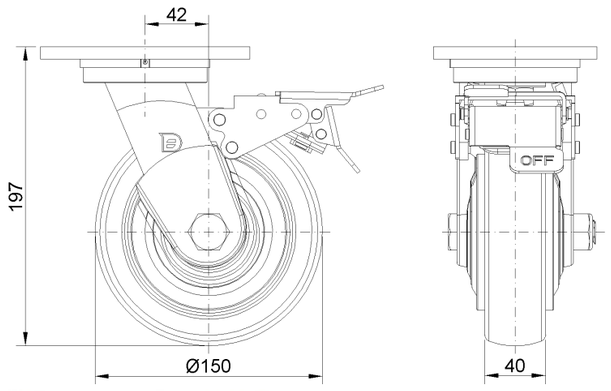

Mounting

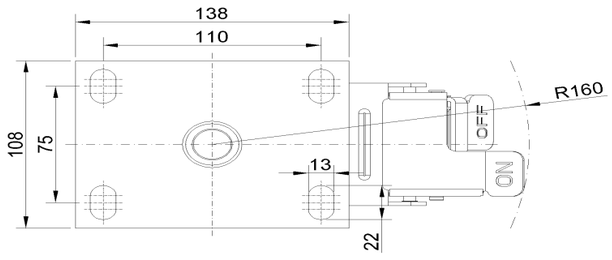

* For any deviation between metric and imperial spec, please refer to the metric spec.

© Copyright 2026 DershengInternational www.dersheng.com