Product Data Sheet

1157 57 Series Caster Series

QPU (Brown round) Wheel Diameter × Wheel Width 150 x 42mm

EAN

KS-11570600532111A

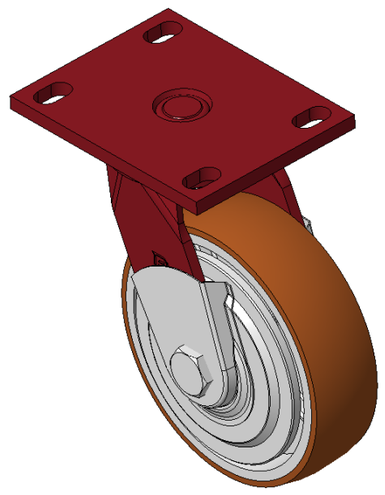

Picture may differ from original product

Portable Casters, Welded Caster Fork, red paint finish
Base plate Mounting Type device, 110x75mm Bolt Hole Spacing
Cast Iron Wheel Center, High Quality Polyurethane Wheel Tread, Cast Iron brown
Bearings—Ball Bearings, equipped with special anti-winding wheel caps

Wheel Tread: Hhigh-Quality Polyurethane
Wheel Center: Iron core / Cast iron core

Drawings are for reference only and may differ from the product

Technical Data

◉ Metric ○ Imperial

Wheel Diameter	150mm
Wheel Width	42mm
Wheel Bearing	Wheels With Ball Bearings
Plate Size	138 x 108mm
Bolt Hole Spacing	110x75mm
Plate Hole	22 x 13mm
Offset	42mm
Swivel Interference	238mm
Overall Height	197mm
Swivel Radius	119mm
Hardness Of Tread	92±5° Shore A
Load Capacity (Dynamic)	550kgs
Load Capacity (Static)	825kgs
Temperature	-20°C to +70°C
Fork Type	Swivel Caster
Stainless	N/A
Electrical Conductivity	N/A
Anti-Static	N/A
Weight	4.10kgs
Standard	ISO22883

Advantages at a glance

Rolling Resistance	● ● ● ● ●
Operating Noise	● ● ● ● ●
Floor Surface Preservation	● ● ● ● ●

Dimensions

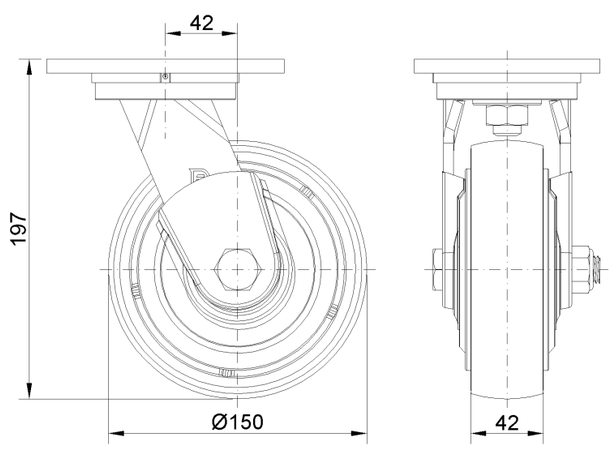

Mounting

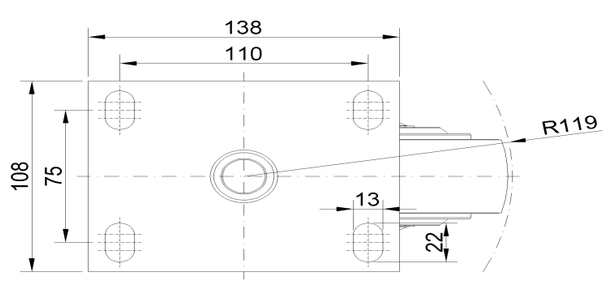

* For any deviation between metric and imperial spec, please refer to the metric spec.

© Copyright 2026 DershengInternational www.dersheng.com