Product Information Sheet

1157 57 Series Caster Series

ZQPU (brown round) Wheel Diameter x Wheel Width 150 x 24 (51) mm

EAN

KS-11570600804071

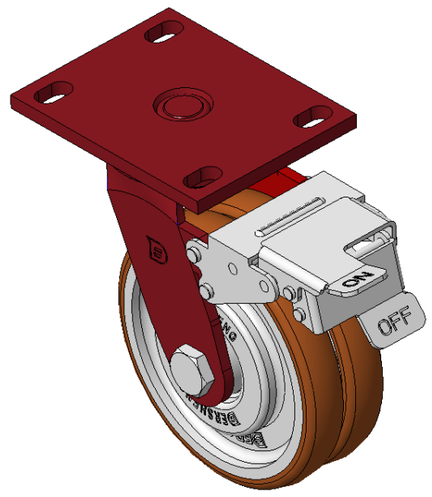

Picture may differ from original product

Equipped with front brake, With locking system Casters, Welded Caster Fork.
Red paint finish, Mounting Type - Top Plate, 110x75mm Bolt Hole Spacing.
Cast Iron Wheel Center, High Quality Polyurethane Wheel Tread, Cast Iron brown.
Bearings—specially designed Ball Bearings to reduce Rolling Resistance.
ZQPU dual wheels, Ergonomic design designally designed for easier starting and turning.

Wheel Tread: Hhigh-Quality Polyurethane

Wheel Center: Iron core/Cast iron core

Drawings are for reference only and may differ from the product

Technical Data

◉ Imperial ○ Metric

Wheel Diameter	6 "
Wheel Width	2
Wheel Bearing	Wheels With Ball Bearings
Plate Size	5-1/2 " x 4-5/16 "
Bolt Hole Spacing	4-5/16 " x3”
Plate Hole	7/8 " x 9/16 "
Offset	1-11/16 "
Swivel Interference	12-11/16 "
Overall Height	7-7/8 "
Swivel Radius	6-3/8 "
Hardness Of Tread	92±5° Shore A
Load Capacity (Dynamic)	1213lbs
Load Capacity (Static)	1819lbs
Temperature	-4°F to +158°F
Fork Type	Swivel Caster With Front Brake
Stainless	N/A
Electrical Conductivity	N/A
Anti-Static	N/A
Weight	12.7lbs
Standard	ISO22883

Advantages at a glance

Rolling Resistance	● ● ● ● ●
Operating Noise	● ● ● ● ●
Floor Surface Preservation	● ● ● ● ●

Dimensions

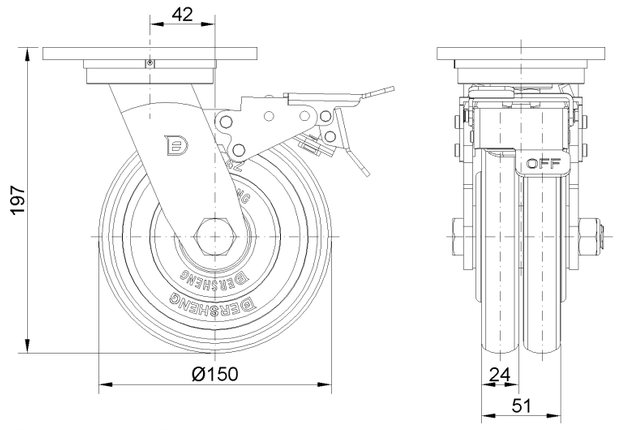

Mounting

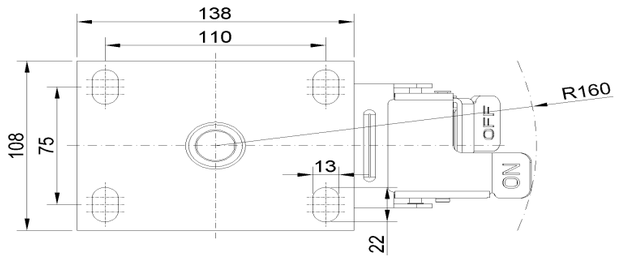

* For any deviation between metric and imperial spec, please refer to the metric spec.

© Copyright 2026 DershengInternational www.dersheng.com