1157 57 Series Caster Series

Non-marking NBR Rubber (milling) Wheel Diameter x Wheel Width 200 x 44mm

EAN

KS-11570800042041

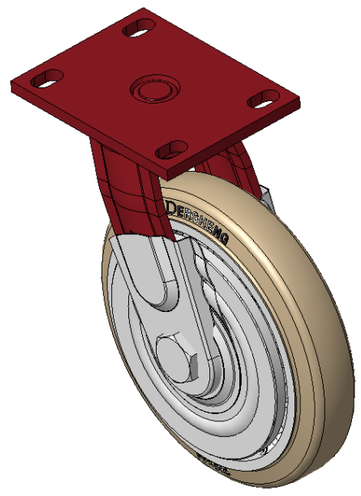

Picture may differ from original product

Portable Casters, Welded Caster Fork, red paint finish.
Base plate Mounting Type device, 110x75mm Bolt Hole Spacing.
Cast Iron Wheel Center, High-Quality, high-elasticity rubber Wheel Tread, Cast Iron to original color.
Bearings—Ball Bearings, equipped with a special anti-winding wheel cover.

Wheel tread: High-quality, high-elasticity rubber tread

Wheel Center: Iron core / Cast iron core

Drawings are for reference only and may differ from the product

Technical Data

◉ Imperial ○ Metric

Wheel Diameter	8 "
Wheel Width	1-3/4 "
Wheel Bearing	Wheels With Ball Bearings
Plate Size	5-9/16 " x 4-3/8 "
Bolt Hole Spacing	4-5/16 " x3”
Plate Hole	7/8 " x 9/16 "
Offset	2-3/16 "
Swivel Interference	12-1/2 "
Overall Height	9-15/16 "
Swivel Radius	4-3/4 "
Hardness Of Tread	85±5° Shore A
Load Capacity (Dynamic)	772lbs
Load Capacity (Static)	1157lbs
Temperature	-4°F to +176°F
Fork Type	Swivel Caster
Stainless	N/A
Electrical Conductivity	N/A
Anti-Static	N/A
Weight	11.5lbs
Standard	ISO22883

Advantages at a glance

Rolling Resistance	● ● ● ○ ○
Operating Noise	● ● ● ● ○
Floor Surface Preservation	● ● ● ● ○

Dimensions

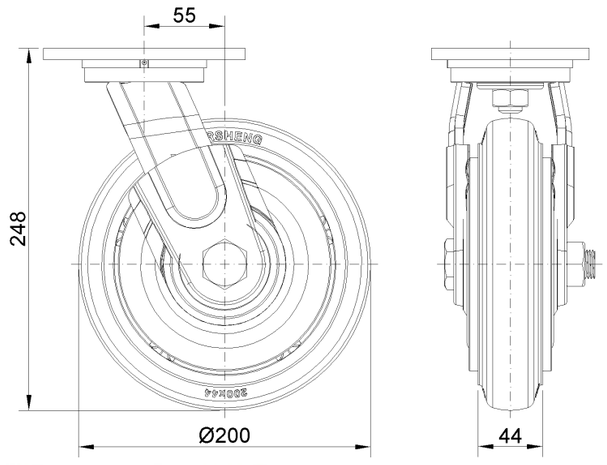

Mounting

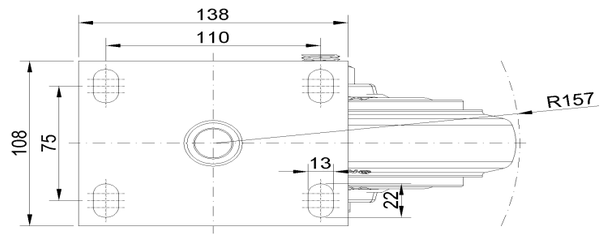

* For any deviation between metric and imperial spec, please refer to the metric spec.

© Copyright 2026 DershengInternational www.dersheng.com