Product Data Sheet

1157 57 Series Caster Series

MRC Wheel (Transparent) Wheel Diameter × Wheel Width 200 × 50mm

EAN

KS-11570800072061

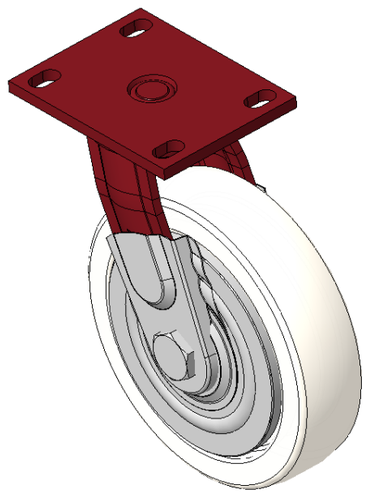

Picture may differ from original product

Portable Casters, Welded Caster Fork, red paint finish
Base plate Mounting Type device, Bolt Hole Spacing 110 x 75
Reinforced Polypropylene Wheel Center, natural Wheel Tread color
Bearings—Ball Bearings, equipped with a special anti-winding wheel cover

Wheel surface: Thermoplastic (PA6)
Wheel Center: Thermoplastic (PA6)

Drawings are for reference only and may differ from the product

Technical Data

◉ Metric ○ Imperial

Wheel Diameter	200mm
Wheel Width	50mm
Wheel Bearing	Wheels With Ball Bearings
Plate Size	138 x 108mm
Bolt Hole Spacing	110x75mm
Plate Hole	22 x 13mm
Offset	55mm
Swivel Interference	314mm
Overall Height	248mm
Swivel Radius	157mm
Hardness Of Tread	75±5° Shore D
Load Capacity (Dynamic)	450kgs
Load Capacity (Static)	675kgs
Temperature	-20°C to +80°C
Fork Type	Swivel Caster
Stainless	N/A
Electrical Conductivity	N/A
Anti-Static	N/A
Weight	4.25kgs
Standard	ISO22883

Advantages at a glance

Rolling Resistance	● ● ● ● ●
Operating Noise	● ● ○ ○ ○
Floor Surface Preservation	● ● ○ ○ ○

Dimensions

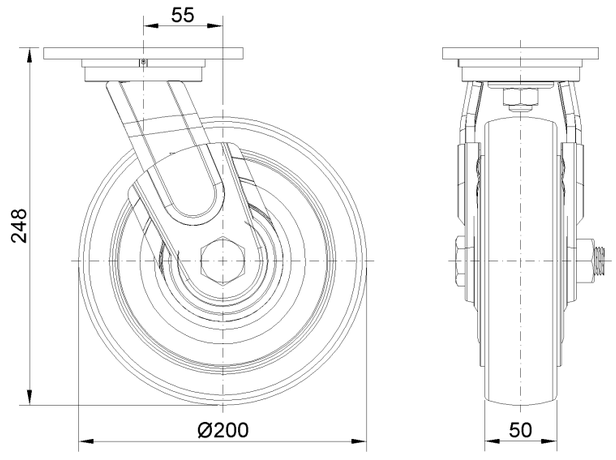

Mounting

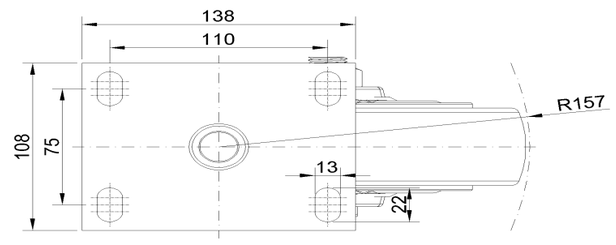

* For any deviation between metric and imperial spec, please refer to the metric spec.

© Copyright 2026 DershengInternational www.dersheng.com