Product Data Sheet

# 1157 57 Series Caster Series

MRC Wheel (Transparent) Wheel Diameter × Wheel Width 200 × 50mm

EAN

KS-11570800074051

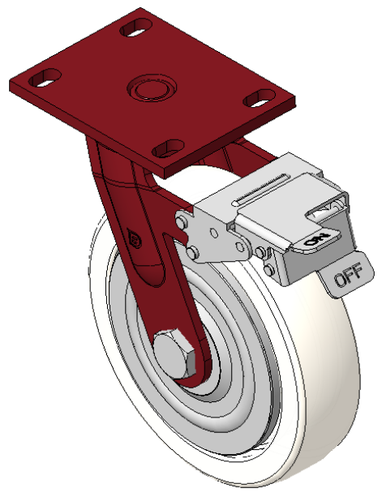


Picture may differ from original product

Equipped with front brake, With locking system Casters, Welded Caster Fork
Red paint finish, Mounting Type - Top Plate, 110x75mm Bolt Hole Spacing
Reinforced Polypropylene, natural Wheel Tread color
Bearings—Ball Bearings

Wheel surface: Thermoplastic (PA6)
Wheel Center: Thermoplastic (PA6)

Drawings are for reference only and may differ from the product

## Technical Data

◉ Imperial ○ Metric

| | |
|---|---|
| Wheel Diameter | 8 " |
| Wheel Width | 2 " |
| Wheel Bearing | Wheels With Ball Bearings |
| Plate Size | 5-1/2 " x 4-5/16 " |
| Bolt Hole Spacing | 4-5/16 " x3” |
| Plate Hole | 7/8 " x 9/16 " |
| Offset | 2-3/16 " |
| Swivel Interference | 14 " |
| Overall Height | 9-15/16 " |
| Swivel Radius | 7-1/16 " |
| Hardness Of Tread | 75±5° Shore D |
| Load Capacity (Dynamic) | 992lbs |
| Load Capacity (Static) | 1488lbs |
| Temperature | -4°F to +176°F |
| Fork Type | Swivel Caster With Front Brake |
| Stainless | N/A |
| Electrical Conductivity | N/A |
| Anti-Static | N/A |
| Weight | 10.4lbs |
| Standard | ISO22883 |

## Advantages at a glance

| | |
|---|---|
| Rolling Resistance | ● ● ● ● ● |
| Operating Noise | ● ● ○ ○ ○ |
| Floor Surface Preservation | ● ● ○ ○ ○ |

## Dimensions

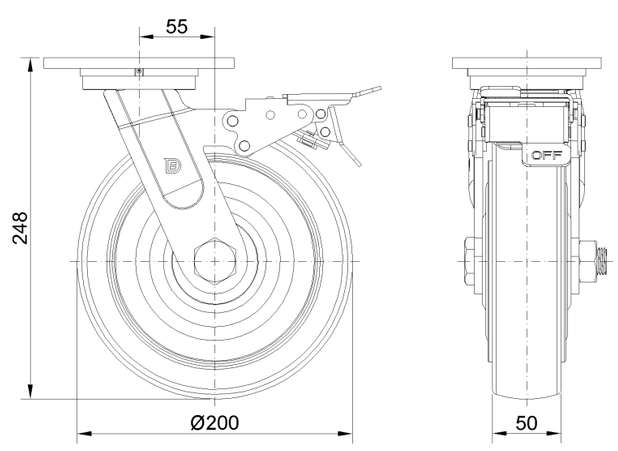


## Mounting

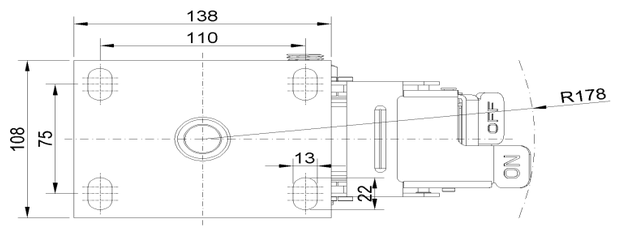


* For any deviation between metric and imperial spec, please refer to the metric spec.

© Copyright 2026 DershengInternational www.dersheng.com