Product Data Sheet

# 1157 57 Series Caster Series

QPU (Brown Flat) Wheel Diameter x Wheel Width 200 x 50mm

EAN

KS-11570800532011

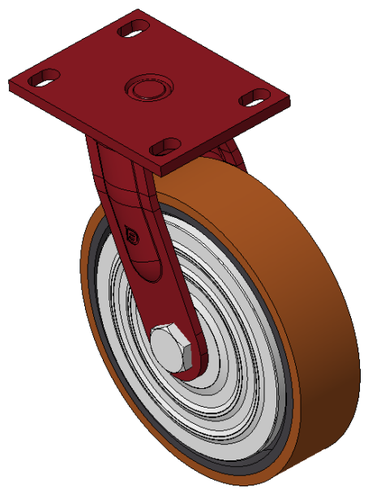

Picture may differ from original product

Portable Casters, Welded Caster Fork, red paint finish
Base plate Mounting Type device, Bolt Hole Spacing 110 x 75
Cast Iron Wheel Center, High Quality Polyurethane Wheel Tread, Cast Iron brown
Bearings—Ball Bearings

Wheel Tread: Hhigh-Quality Polyurethane
Wheel Center: Iron core / Cast iron core

Drawings are for reference only and may differ from the product

## Technical Data

◉ Imperial ○ Metric

| | |
|---|---|
| Wheel Diameter | 8 " |
| Wheel Width | 2 " |
| Wheel Bearing | Wheels With Ball Bearings |
| Plate Size | 5-1/2 " x 4-5/16 " |
| Bolt Hole Spacing | 4-5/16 " x3” |
| Plate Hole | 7/8 " x 9/16 " |
| Offset | 2-3/16 " |
| Swivel Interference | 12-1/2 " |
| Overall Height | 9-15/16 " |
| Swivel Radius | 6-1/4 " |
| Hardness Of Tread | 92±5° Shore A |
| Load Capacity (Dynamic) | 1587lbs |
| Load Capacity (Static) | 2480lbs |
| Temperature | -4°F to +158°F |
| Fork Type | Swivel Caster |
| Stainless | N/A |
| Electrical Conductivity | N/A |
| Anti-Static | N/A |
| Weight | 12.7lbs |
| Standard | ISO22883 |

## Advantages at a glance

| | |
|---|---|
| Rolling Resistance | ● ● ● ● ● |
| Operating Noise | ● ● ● ● ● |
| Floor Surface Preservation | ● ● ● ● ● |

## Dimensions

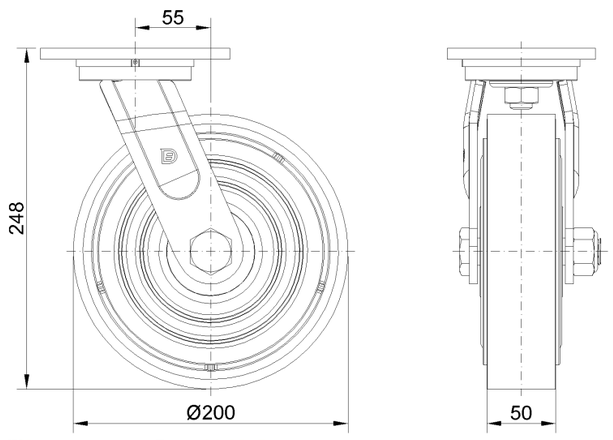


## Mounting

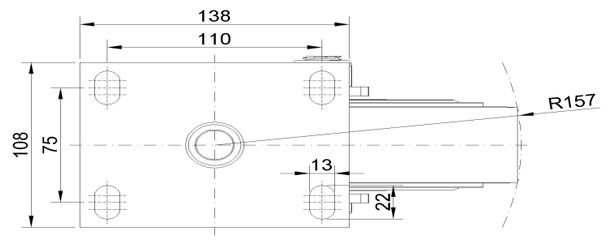


* For any deviation between metric and imperial spec, please refer to the metric spec.

© Copyright 2026 DershengInternational www.dersheng.com