# 1165-1 Heavy Duty AMR/AGV Spring-Loading Caster Wheel Series

QPU (blue round) Wheel Diameter × Wheel Width 50 × 45mm

EAN

KS-11650200532023

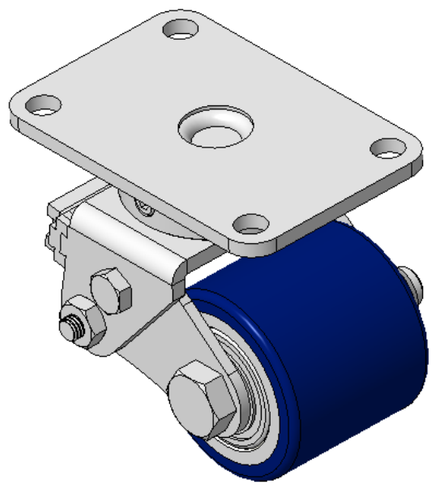

Drawings are for reference only and may differ from the product

Picture may differ from original product

## Technical Data

◉ Imperial ○ Metric

| | |
|---|---|
| Wheel Diameter | 2 " |
| Wheel Width | 1-13/16 " |
| Wheel Bearing | Wheels With Ball Bearings |
| Plate Size | 3-9/16 " x 2-7/16 " |
| Bolt Hole Spacing | 2-7/8 “x1-3/4” |
| Plate Hole | 3/8 " |
| Offset | 15/16 " |
| Swivel Interference | 4-3/8 " |
| Overall Height | 3-1/8 " |
| Swivel Radius | 2-3/16 " |
| Hardness Of Tread | 87±5° Shore A |
| Load Capacity (Dynamic) | 110lbs |
| Load Capacity (Static) | 165lbs |
| Temperature | -4°F to +158°F |
| Fork Type | Swivel Caster |
| Stainless | N/A |
| Electrical Conductivity | N/A |
| Anti-Static | N/A |
| Weight | 2.1lbs |
| Standard | ISO22883 |

## Advantages at a glance

| | |
|---|---|
| Rolling Resistance | ●●●●● |
| Operating Noise | ●●●●● |
| Floor Surface Preservation | ●●●●● |

## Dimensions

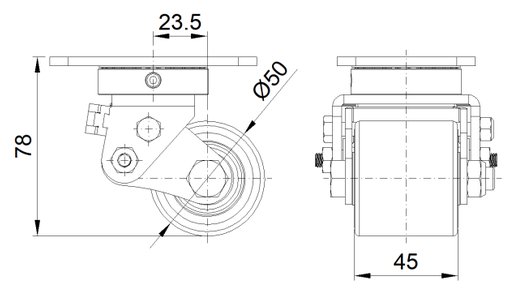


## Mounting

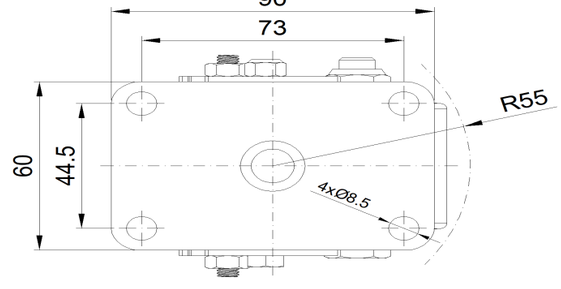


* For any deviation between metric and imperial spec, please refer to the metric spec.



© Copyright 2026 DershengInternational www.dersheng.com