1165-1 Heavy Duty AMR/AGV Spring-Loading Caster Wheel Series

ZQPU (Milled Blue) Wheel Diameter × Wheel Width 50× 20（41.5） mm

EAN

KS-11650200801023

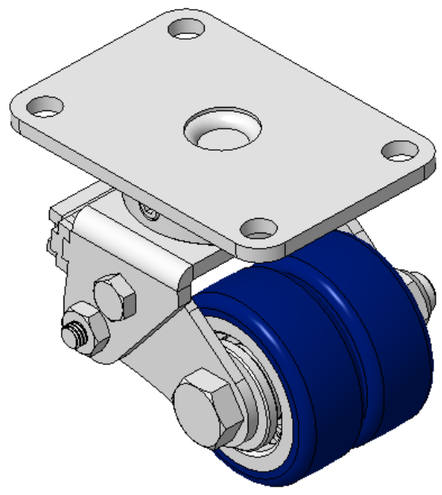

Picture may differ from original product

Drawings are for reference only and may differ from the product

Technical Data

◉ Metric ○ Imperial

Wheel Diameter	50mm
Wheel Width	20mm
Wheel Bearing	Wheels With Ball Bearings
Plate Size	90 x 60mm
Bolt Hole Spacing	73 x 44.5mm
Plate Hole	8.5mm
Offset	23.5mm
Swivel Interference	110mm
Overall Height	78mm
Swivel Radius	55mm
Hardness Of Tread	87±5° Shore A
Load Capacity (Dynamic)	50kgs
Load Capacity (Static)	75kgs
Temperature	-20°C to +70°C
Fork Type	Swivel Caster
Stainless	N/A
Electrical Conductivity	N/A
Anti-Static	N/A
Weight	1.44kgs
Standard	ISO22883

Advantages at a glance

Rolling Resistance	●●●●●
Operating Noise	●●●●●
Floor Surface Preservation	●●●●●

Dimensions

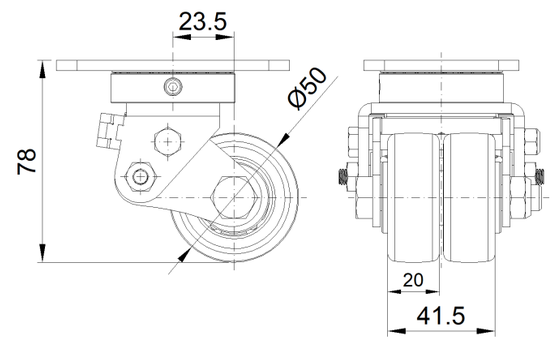

Mounting

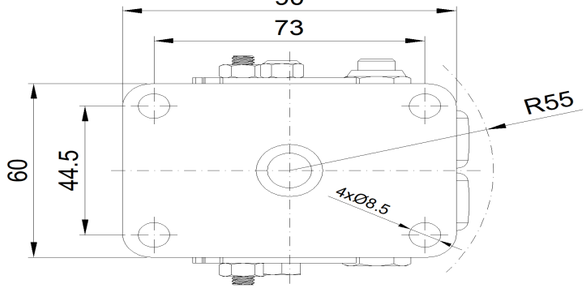

* For any deviation between metric and imperial spec, please refer to the metric spec.

© Copyright 2026 DershengInternational www.dersheng.com