1165-2 Heavy Duty AMR/AGV-2 Caster Series

ZQPU (Milled Blue) Wheel Diameter × Wheel Width 50× 20（41.5） mm

EAN

KS-11650202802013

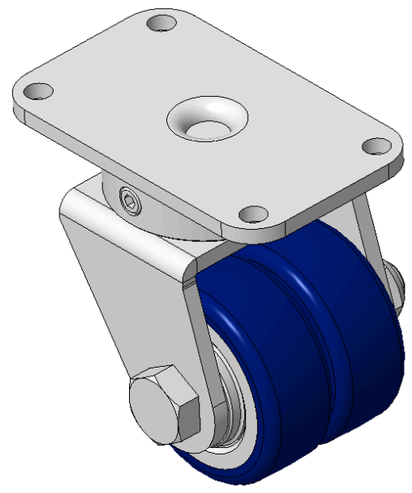

Picture may differ from original product

Drawings are for reference only and may differ from the product

Technical Data

◉ Imperial ○ Metric

Wheel Diameter	2 "
Wheel Width	13/16 "
Wheel Bearing	Wheels With Ball Bearings
Plate Size	3-3/8 " x 1-15/16 "
Bolt Hole Spacing	2-3/4 “x1-7/16”
Plate Hole	1/4 "
Offset	5/8 "
Swivel Interference	92
Overall Height	3-1/8 "
Swivel Radius	1-7/8 "
Hardness Of Tread	87±5° Shore A
Load Capacity (Dynamic)	154lbs
Load Capacity (Static)	231lbs
Temperature	-4°F to +158°F
Fork Type	Swivel Caster
Stainless	N/A
Electrical Conductivity	N/A
Anti-Static	N/A
Weight	1.7lbs
Standard	ISO22883

Advantages at a glance

Rolling Resistance	●●●●●
Operating Noise	●●●●●
Floor Surface Preservation	●●●●●

Dimensions

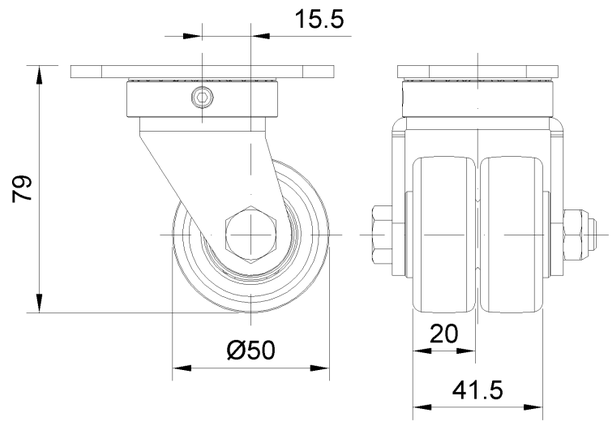

Mounting

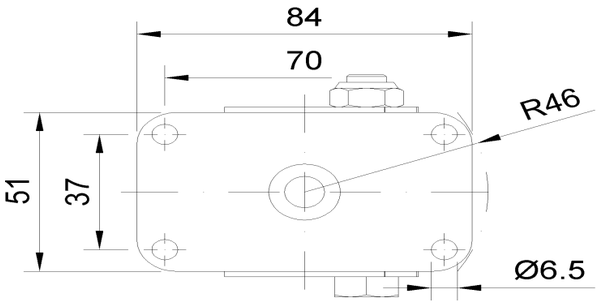

* For any deviation between metric and imperial spec, please refer to the metric spec.

© Copyright 2026 DershengInternational www.dersheng.com