1165-2 Heavy Duty AMR/AGV-2 Caster Series

ZQPU (Milled Blue) Wheel Diameter × Wheel Width 50× 20（41.5） mm

EAN

KS-11650202802053

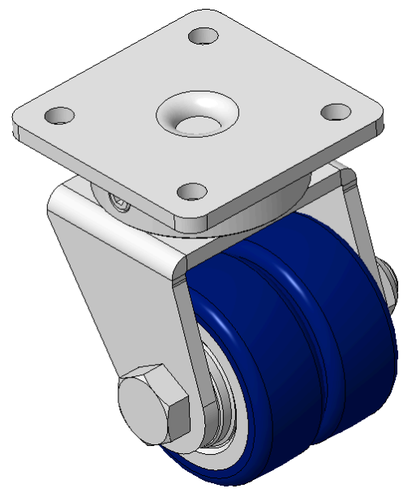

Picture may differ from original product

Drawings are for reference only and may differ from the product

Technical Data

◉ Metric ○ Imperial

Wheel Diameter	50mm
Wheel Width	20mm
Wheel Bearing	Wheels With Ball Bearings
Plate Size	60 x 60mm
Bolt Hole Spacing	42.5 x 42.5mm
Plate Hole	6.5mm
Offset	15.5mm
Swivel Interference	92mm
Overall Height	79mm
Swivel Radius	46mm
Hardness Of Tread	87±5° Shore A
Load Capacity (Dynamic)	70kgs
Load Capacity (Static)	105kgs
Temperature	-20°C to +70°C
Fork Type	Swivel Caster
Stainless	N/A
Electrical Conductivity	N/A
Anti-Static	N/A
Weight	0.76kgs
Standard	ISO22883

Advantages at a glance

Rolling Resistance	●●●●●
Operating Noise	●●●●●
Floor Surface Preservation	●●●●●

Dimensions

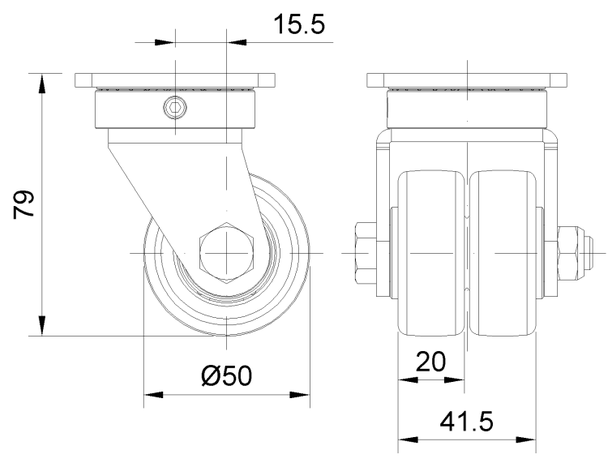

Mounting

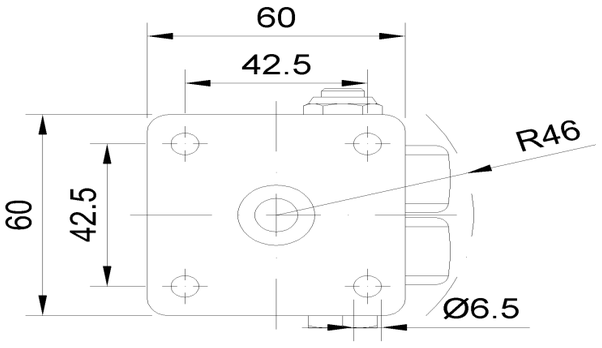

* For any deviation between metric and imperial spec, please refer to the metric spec.

© Copyright 2026 DershengInternational www.dersheng.com