1165-2 Heavy Duty AMR/AGV-2 Caster Series

Anti-static ZQPU Wheel (milling black) Wheel Diameter x Wheel Width 50 x 20（41.5）mm

EAN

KS-11650202802723

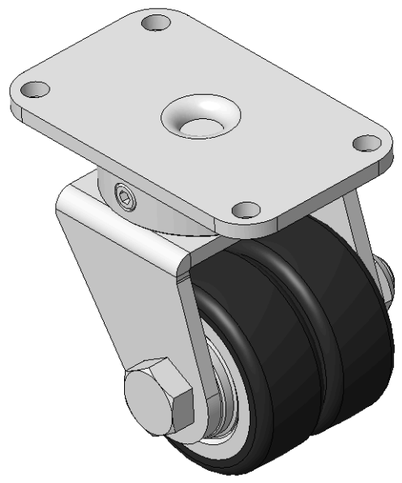

Drawings are for reference only and may differ from the product

Picture may differ from original product

Technical Data

◉ Metric ○ Imperial

Wheel Diameter	50mm
Wheel Width	20mm
Wheel Bearing	Wheels With Ball Bearings
Plate Size	84 x 51mm
Bolt Hole Spacing	70 x 37mm
Plate Hole	6.5mm
Offset	15.5mm
Swivel Interference	92mm
Overall Height	79mm
Swivel Radius	46mm
Hardness Of Tread	77±5° Shore A
Load Capacity (Dynamic)	70kgs
Load Capacity (Static)	105kgs
Temperature	-20°C to +70°C
Fork Type	Swivel Caster
Stainless	N/A
Electrical Conductivity	N/A
Anti-Static	Y 10^6/~10^9/Ω
Weight	0.78kgs
Standard	ISO22883

Advantages at a glance

Rolling Resistance	●●●●●
Operating Noise	●●●●●
Floor Surface Preservation	●●●●●

Dimensions

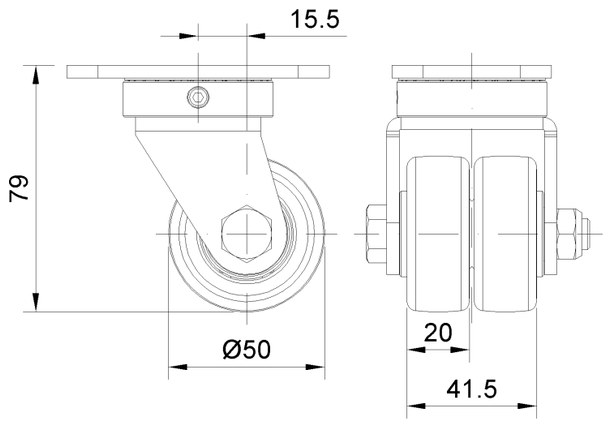

Mounting

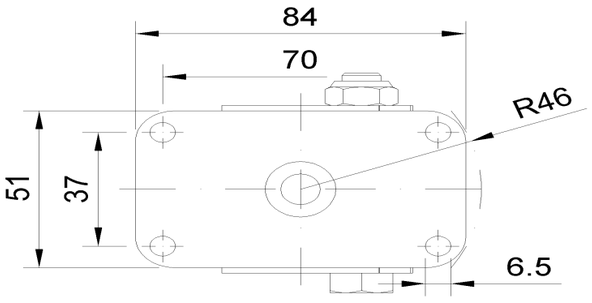

* For any deviation between metric and imperial spec, please refer to the metric spec.

© Copyright 2026 DershengInternational www.dersheng.com