# 1165-2 Heavy Duty AMR/AGV-2 Caster Series

Anti-static ZQPU Wheel (milling black) Wheel Diameter x Wheel Width 50 x 20（41.5）mm

EAN

KS-11650202802723

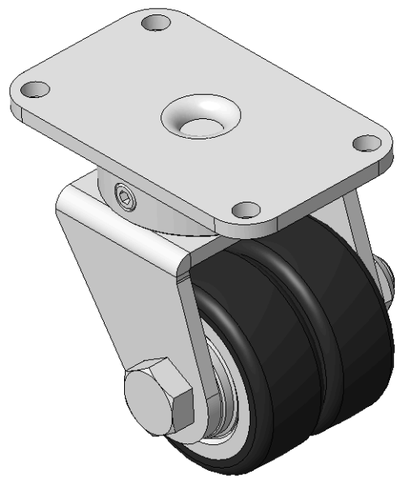

Picture may differ from original product

Drawings are for reference only and may differ from the product

## Technical Data

◉ Imperial ○ Metric

| | |
|---|---|
| Wheel Diameter | 2 " |
| Wheel Width | 13/16 " |
| Wheel Bearing | Wheels With Ball Bearings |
| Plate Size | 3-3/8 " x 1-15/16 " |
| Bolt Hole Spacing | 2-3/4 “x1-7/16” |
| Plate Hole | 1/4 " |
| Offset | 5/8 " |
| Swivel Interference | 3-11/16 " |
| Overall Height | 3-1/8 " |
| Swivel Radius | 1-7/8 " |
| Hardness Of Tread | 77±5° Shore A |
| Load Capacity (Dynamic) | 154lbs |
| Load Capacity (Static) | 231lbs |
| Temperature | -4°F to +158°F |
| Fork Type | Swivel Caster |
| Stainless | N/A |
| Electrical Conductivity | N/A |
| Anti-Static | Y 10^6/~10^9/Ω |
| Weight | 1.7lbs |
| Standard | ISO22883 |

## Advantages at a glance

| | |
|---|---|
| Rolling Resistance | ●●●●● |
| Operating Noise | ●●●●● |
| Floor Surface Preservation | ●●●●● |

## Dimensions

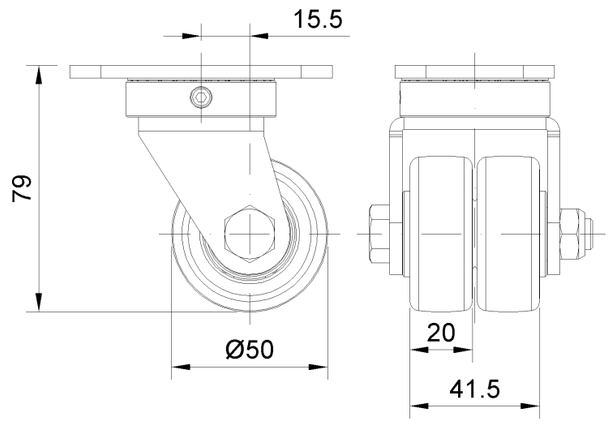


## Mounting

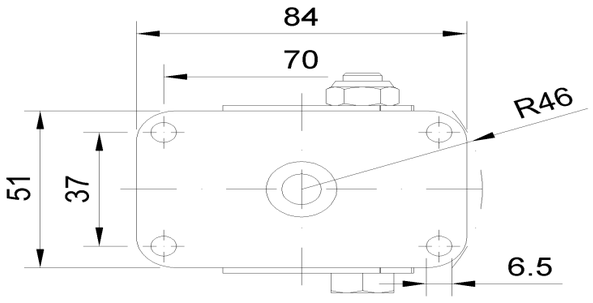


* For any deviation between metric and imperial spec, please refer to the metric spec.

© Copyright 2026 DershengInternational www.dersheng.com