1165-3 AMR/AGV-3 Double Precision Ball Bearing Caster (Medium Duty) Series

QPU (blue round) Wheel Diameter × Wheel Width 50 × 45mm

EAN

KS-11650203532013

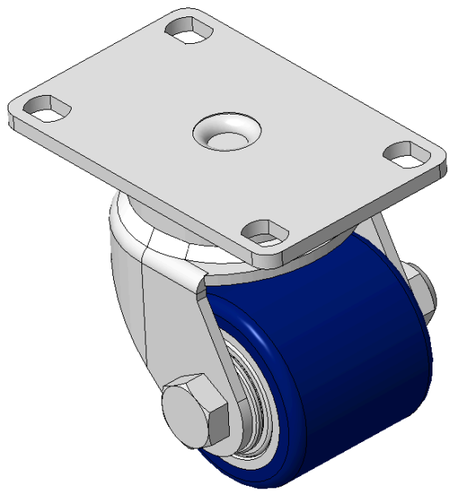

Picture may differ from original product

Drawings are for reference only and may differ from the product

Technical Data

◉ Metric ○ Imperial

Wheel Diameter	50mm
Wheel Width	45mm
Wheel Bearing	Wheels With Ball Bearings
Plate Size	92 x 60mm
Bolt Hole Spacing	75 x 45mm
Plate Hole	11.2 x 8.6mm
Offset	20mm
Swivel Interference	108mm
Overall Height	79mm
Swivel Radius	54mm
Hardness Of Tread	87±5° Shore A
Load Capacity (Dynamic)	70kgs
Load Capacity (Static)	105kgs
Temperature	-20°C to +70°C
Fork Type	Swivel Caster
Stainless	N/A
Electrical Conductivity	N/A
Anti-Static	N/A
Weight	0.87kgs
Standard	ISO22883

Advantages at a glance

Rolling Resistance	●●●●●
Operating Noise	●●●●●
Floor Surface Preservation	●●●●●

Dimensions

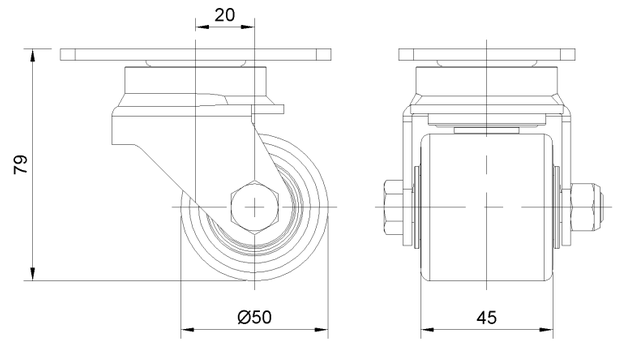

Mounting

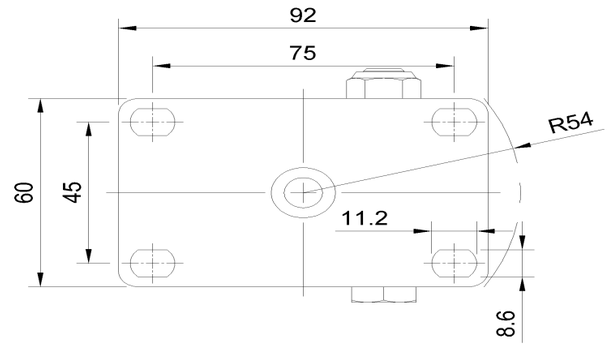

* For any deviation between metric and imperial spec, please refer to the metric spec.

© Copyright 2026 DershengInternational www.dersheng.com