# 1165-3 AMR/AGV-3 Double Precision Ball Bearing Caster (Medium Duty) Series

ZQPU (Milled Blue) Wheel Diameter × Wheel Width 50× 20（41.5） mm

EAN

KS-11650203802113

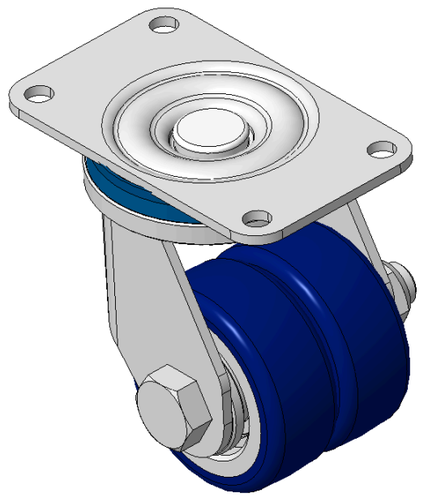

Picture may differ from original product

Drawings are for reference only and may differ from the product

## Technical Data

◉ Imperial ○ Metric

| | |
|---|---|
| Wheel Diameter | 2 " |
| Wheel Width | 13/16 " |
| Wheel Bearing | Wheels With Ball Bearings |
| Plate Size | 3-3/8 " x 1-15/16 " |
| Bolt Hole Spacing | 2-3/4 “x1-7/16” |
| Plate Hole | 1/4 " |
| Offset | 5/8 " |
| Swivel Interference | 3-3/4 " |
| Overall Height | 3-1/8 " |
| Swivel Radius | 1-7/8 " |
| Hardness Of Tread | 87±5° Shore A |
| Load Capacity (Dynamic) | 154lbs |
| Load Capacity (Static) | 231lbs |
| Temperature | -4°F to +158°F |
| Fork Type | Swivel Caster |
| Stainless | N/A |
| Electrical Conductivity | N/A |
| Anti-Static | N/A |
| Weight | 1.6lbs |
| Standard | ISO22883 |

## Advantages at a glance

| | |
|---|---|
| Rolling Resistance | ●●●●● |
| Operating Noise | ●●●●● |
| Floor Surface Preservation | ●●●●● |

## Dimensions

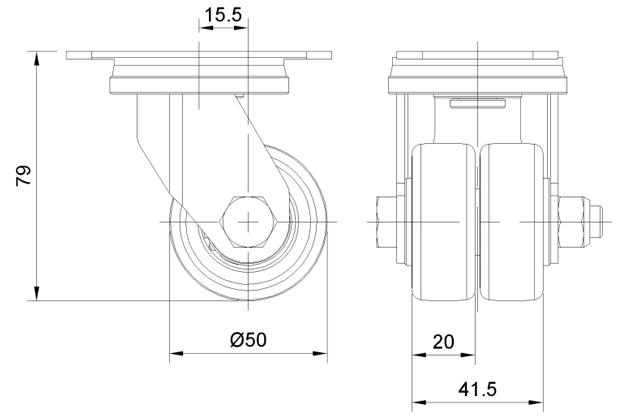


## Mounting

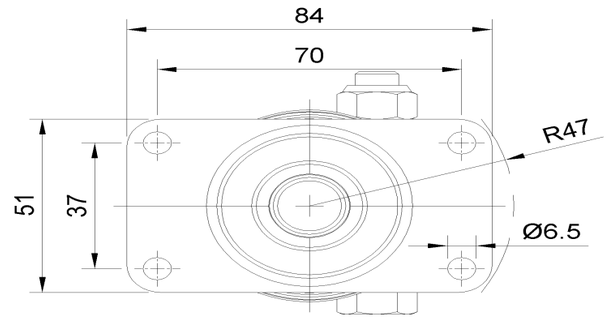


* For any deviation between metric and imperial spec, please refer to the metric spec.

© Copyright 2026 DershengInternational www.dersheng.com