# 1165-1 Heavy Duty AMR/AGV Spring-Loading Caster Wheel Series

Anti-static ZQPU (milling black) Wheel Diameter x Wheel Width 75 x 20（41.5）mm

EAN

KS-11650300802713

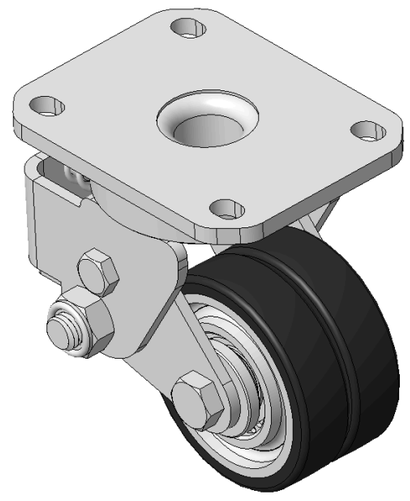

Drawings are for reference only and may differ from the product

Picture may differ from original product

## Technical Data

◉ Metric ○ Imperial

| | |
|---|---|
| Wheel Diameter | 75mm |
| Wheel Width | 20mm |
| Wheel Bearing | Wheels With Ball Bearings |
| Plate Size | 110 x 85mm |
| Bolt Hole Spacing | 80 x 60mm |
| Plate Hole | 12 x 9mm |
| Offset | 25.4mm |
| Swivel Interference | 130mm |
| Overall Height | 116mm |
| Swivel Radius | 65mm |
| Hardness Of Tread | 77±5° Shore A |
| Load Capacity (Dynamic) | 250kgs |
| Load Capacity (Static) | 375kgs |
| Temperature | -20°C to +70°C |
| Fork Type | Swivel Caster |
| Stainless | N/A |
| Electrical Conductivity | N/A |
| Anti-Static | Y 10^6/~10^9/Ω |
| Weight | 1.88kgs |
| Standard | ISO22883 |

## Advantages at a glance

| | |
|---|---|
| Rolling Resistance | ●●●●● |
| Operating Noise | ●●●●● |
| Floor Surface Preservation | ●●●●● |

## Dimensions

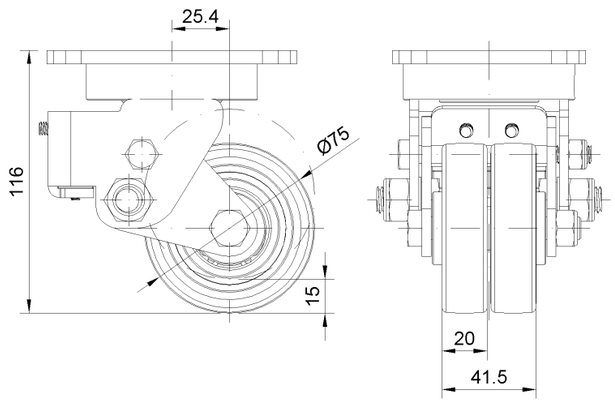


## Mounting

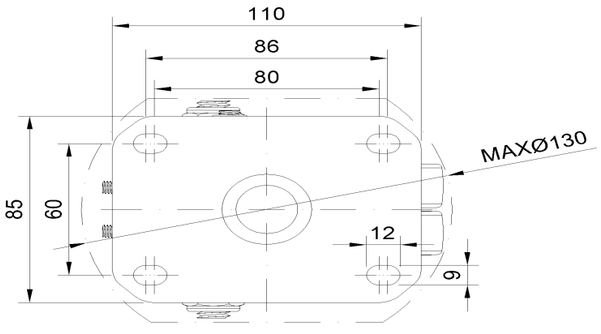


* For any deviation between metric and imperial spec, please refer to the metric spec.

© Copyright 2026 DershengInternational www.dersheng.com