# 1165-2 Heavy Duty AMR/AGV-2 Caster Series

QPU (brown round) Wheel Diameter × Wheel Width 75 × 45mm

EAN

KS-11650302531023

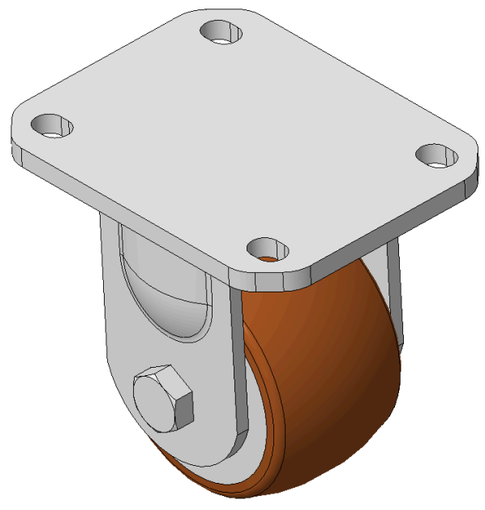

Picture may differ from original product

Drawings are for reference only and may differ from the product

## Technical Data

◉ Metric ○ Imperial

| | |
|---|---|
| Wheel Diameter | 75mm |
| Wheel Width | 45mm |
| Wheel Bearing | Wheels With Ball Bearings |
| Plate Size | 110 x 85mm |
| Bolt Hole Spacing | 80 x 60mm |
| Plate Hole | 12 x 9mm |
| Overall Height | 102.5mm |
| Hardness Of Tread | 92±5° Shore A |
| Load Capacity (Dynamic) | 250kgs |
| Load Capacity (Static) | 375kgs |
| Temperature | -20°C to +70°C |
| Fork Type | Rigid Caster |
| Stainless | N/A |
| Electrical Conductivity | N/A |
| Anti-Static | N/A |
| Weight | 1.00kgs |
| Standard | ISO22883 |

## Advantages at a glance

| | |
|---|---|
| Rolling Resistance | ●●●●● |
| Operating Noise | ●●●●● |
| Floor Surface Preservation | ●●●●● |

## Dimensions

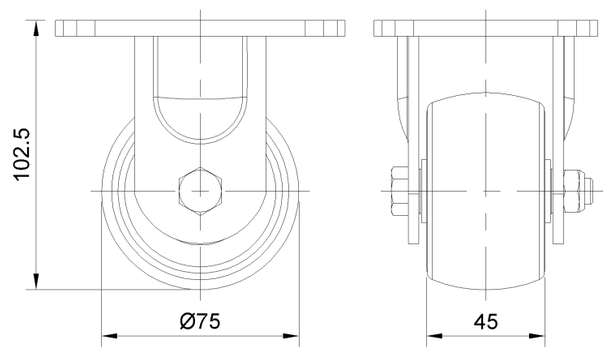


## Mounting

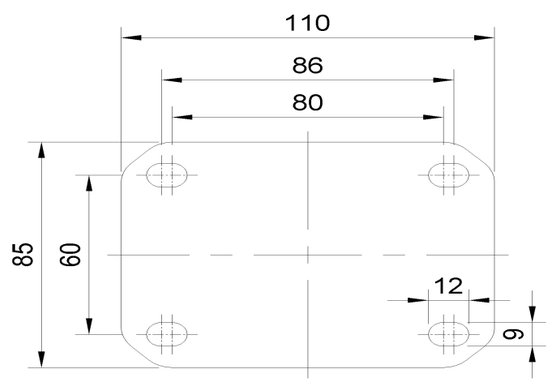


* For any deviation between metric and imperial spec, please refer to the metric spec.

© Copyright 2026 DershengInternational www.dersheng.com