1165-3 AMR/AGV-3 Double Precision Ball Bearing Caster (Medium Duty) Series

QPU (blue round) Wheel Diameter x Wheel Width 75 x 45mm

EAN

KS-11650303532043

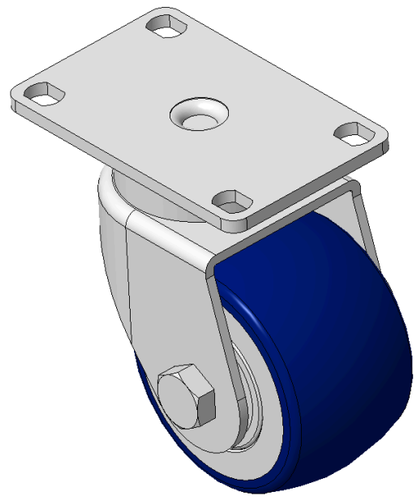

Picture may differ from original product

Drawings are for reference only and may differ from the product

Technical Data

◉ Metric ○ Imperial

Wheel Diameter	75mm
Wheel Width	45mm
Wheel Bearing	Wheels With Ball Bearings
Plate Size	92 x 60mm
Bolt Hole Spacing	75 x 45mm
Plate Hole	11.1 x 8.6mm
Offset	25mm
Swivel Interference	130mm
Overall Height	102.5mm
Swivel Radius	65mm
Hardness Of Tread	87±5° Shore A
Load Capacity (Dynamic)	200kgs
Load Capacity (Static)	300kgs
Temperature	-20°C to +70°C
Fork Type	Swivel Caster
Stainless	N/A
Electrical Conductivity	N/A
Anti-Static	N/A
Weight	1.83kgs
Standard	ISO22883

Advantages at a glance

Rolling Resistance	●●●●●
Operating Noise	●●●●●
Floor Surface Preservation	●●●●●

Dimensions

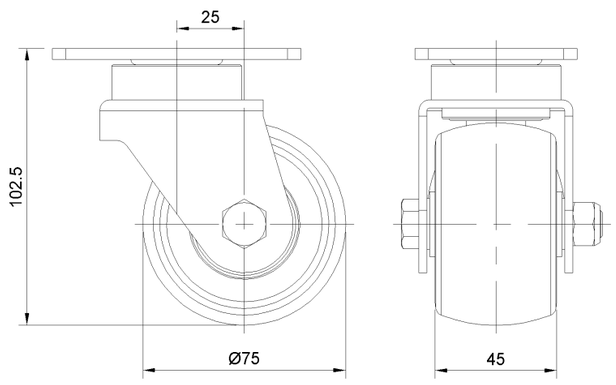

Mounting

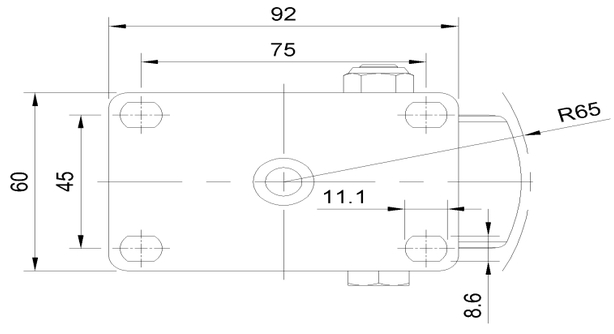

* For any deviation between metric and imperial spec, please refer to the metric spec.

© Copyright 2026 DershengInternational www.dersheng.com