1165-3 AMR/AGV-3 Double Precision Ball Bearing Caster (Medium Duty) Series

ZQPU (milling blue) Wheel Diameter × Wheel Width 75×20 (41.5) mm

EAN

KS-11650303802013

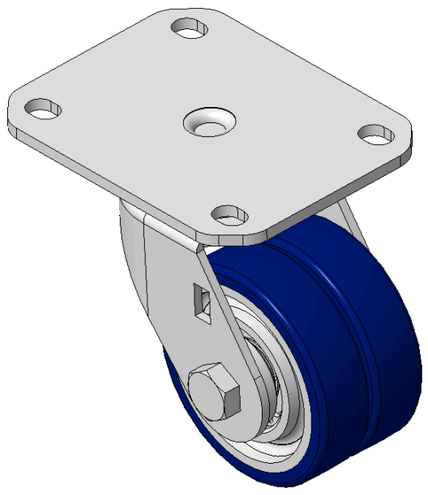

Picture may differ from original product

Drawings are for reference only and may differ from the product

Technical Data

◉ Metric ○ Imperial

Wheel Diameter	75mm
Wheel Width	20mm
Wheel Bearing	Wheels With Ball Bearings
Plate Size	110 x 85mm
Bolt Hole Spacing	80 x 60mm
Plate Hole	12 x 9mm
Offset	32mm
Swivel Interference	145mm
Overall Height	105.5mm
Swivel Radius	72.5mm
Hardness Of Tread	87±5° Shore A
Load Capacity (Dynamic)	200kgs
Load Capacity (Static)	300kgs
Temperature	-20°C to +70°C
Fork Type	Swivel Caster
Stainless	N/A
Electrical Conductivity	N/A
Anti-Static	N/A
Weight	1.79kgs
Standard	ISO22883

Advantages at a glance

Rolling Resistance	●●●●●
Operating Noise	●●●●●
Floor Surface Preservation	●●●●●

Dimensions

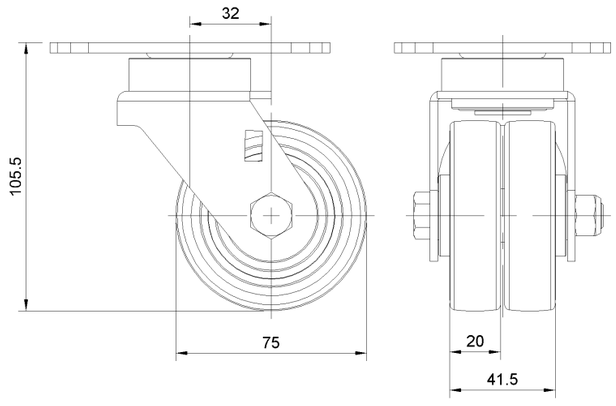

Mounting

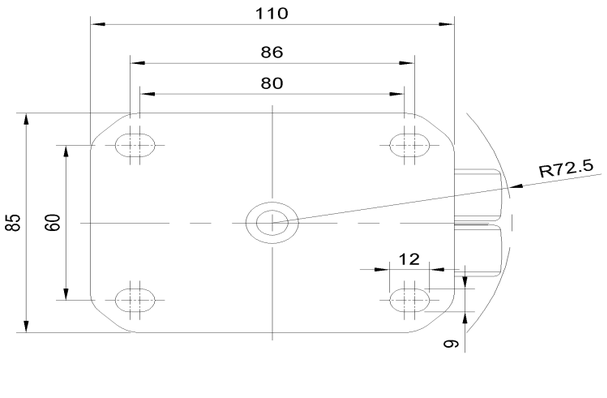

* For any deviation between metric and imperial spec, please refer to the metric spec.

© Copyright 2026 DershengInternational www.dersheng.com