# 1165-3 AMR/AGV-3 Double Precision Ball Bearing Caster (Medium Duty) Series

ZQPU (milling blue) Wheel Diameter × Wheel Width 75×20 (41.5) mm

EAN

KS-11650303802033

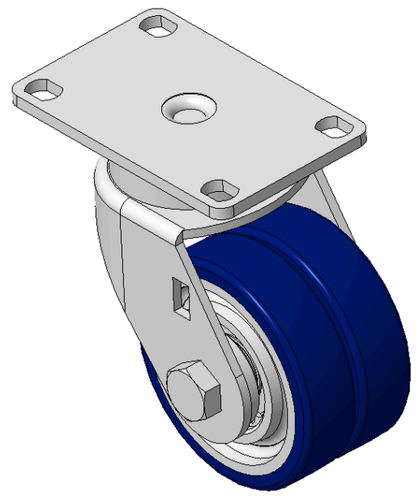

Picture may differ from original product

Drawings are for reference only and may differ from the product

## Technical Data

◉ Metric ○ Imperial

| | |
|---|---|
| Wheel Diameter | 75mm |
| Wheel Width | 20mm |
| Wheel Bearing | Wheels With Ball Bearings |
| Plate Size | 92 x 60mm |
| Bolt Hole Spacing | 75 x 45mm |
| Plate Hole | 11.1 x 8.6mm |
| Offset | 32mm |
| Swivel Interference | 145mm |
| Overall Height | 105.5mm |
| Swivel Radius | 72.5mm |
| Hardness Of Tread | 87±5° Shore A |
| Load Capacity (Dynamic) | 200kgs |
| Load Capacity (Static) | 300kgs |
| Temperature | -20°C to +70°C |
| Fork Type | Swivel Caster |
| Stainless | N/A |
| Electrical Conductivity | N/A |
| Anti-Static | N/A |
| Weight | 1.78kgs |
| Standard | ISO22883 |

## Advantages at a glance

| | |
|---|---|
| Rolling Resistance | ●●●●● |
| Operating Noise | ●●●●● |
| Floor Surface Preservation | ●●●●● |

## Dimensions

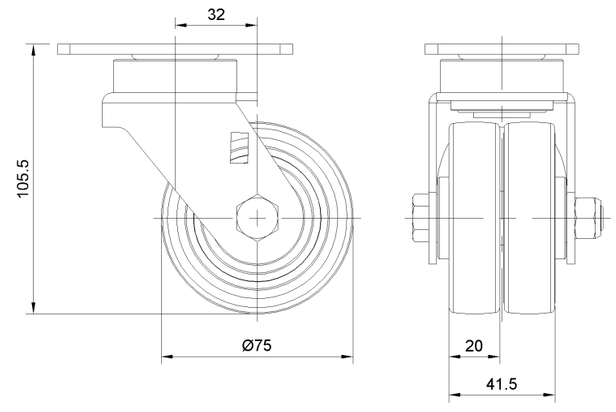


## Mounting

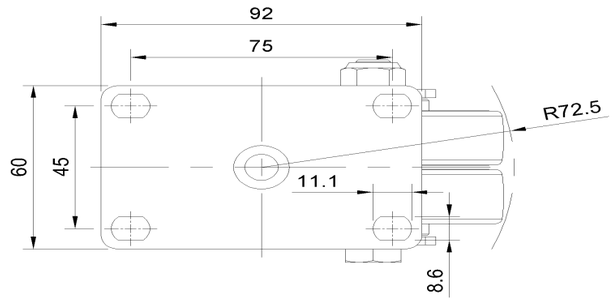


* For any deviation between metric and imperial spec, please refer to the metric spec.

© Copyright 2026 DershengInternational www.dersheng.com