1165-4 1165 Series — AMR/AGV-4 Single Precision Ball Bearing Caster (Medium Duty)Series

AQPU (Grey round) Wheel Diameter × Wheel Width 75 x 30mm

EAN

KS-11650304602013

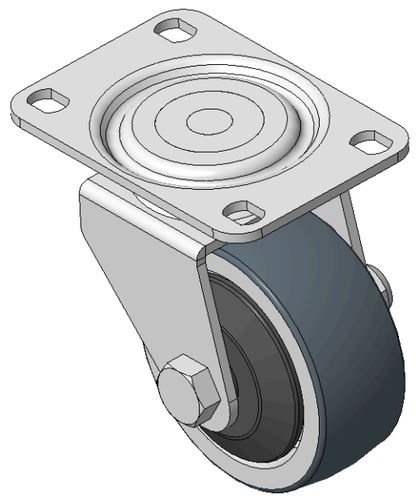

Picture may differ from original product

Drawings are for reference only and may differ from the product

Technical Data

◉ Imperial ○ Metric

Wheel Diameter	3 "
Wheel Width	1-3/16 "
Wheel Bearing	Wheels With Ball Bearings
Plate Size	3-5/8 " x 2-5/8 "
Bolt Hole Spacing	3 " x 1-13/16 "
Plate Hole	3/8 " x 3/8 "
Offset	13/16 "
Swivel Interference	5 "
Overall Height	3-15/16 "
Swivel Radius	2-1/2 "
Hardness Of Tread	77±5° Shore A
Load Capacity (Dynamic)	331lbs
Load Capacity (Static)	496lbs
Temperature	-4°F to +158°F
Fork Type	Swivel Caster
Stainless	N/A
Electrical Conductivity	N/A
Anti-Static	N/A
Weight	4.0lbs
Standard	ISO22883

Advantages at a glance

Rolling Resistance	●●●●●
Operating Noise	●●●●●
Floor Surface Preservation	●●●●●

Dimensions

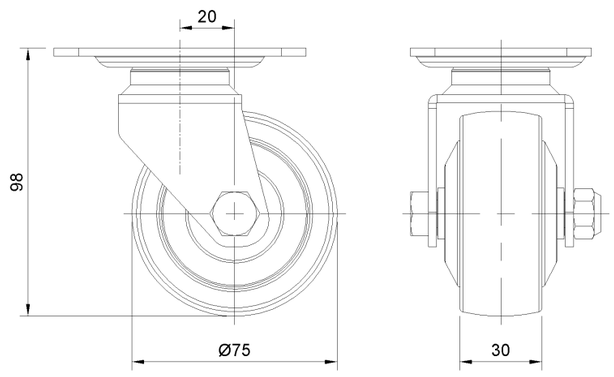

Mounting

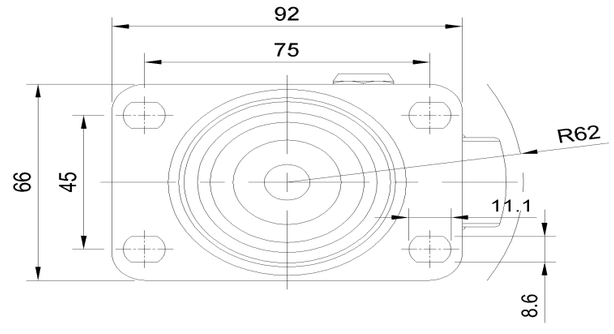

* For any deviation between metric and imperial spec, please refer to the metric spec.

© Copyright 2026 DershengInternational www.dersheng.com