1165-5 AMR/AGV- 5 Pressed Steel Caster - Single Wheel Series (Medium/Light Duty)

Anti-static HPU (black round) Wheel Diameter x Wheel Width 75 x 30 mm

EAN

KS-11650305752113



Picture may differ from original product

Drawings are for reference only and may differ from the product

Technical Data

◉ Metric ○ Imperial

Wheel Diameter	75mm
Wheel Width	30mm
Wheel Bearing	Wheels With Ball Bearings
Plate Size	90 x 90mm
Bolt Hole Spacing	70 x 70mm
Plate Hole	10.5mm
Offset	25mm
Swivel Interference	152mm
Overall Height	107mm
Swivel Radius	76mm
Hardness Of Tread	92±5° Shore A
Load Capacity (Dynamic)	300kgs
Load Capacity (Static)	450kgs
Temperature	-20°C to +70°C
Fork Type	Swivel Caster
Stainless	N/A
Electrical Conductivity	N/A
Anti-Static	Y 10^6/~10^9/Ω
Weight	2.03kgs
Standard	ISO22883

Advantages at a glance

Rolling Resistance	●●●●●
Operating Noise	●●●●○
Floor Surface Preservation	●●●●●

Dimensions

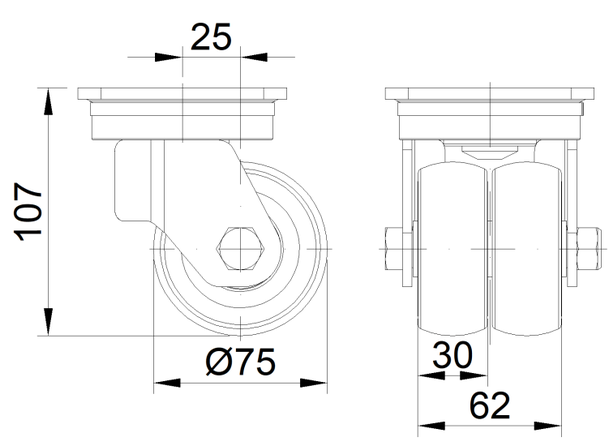

Mounting

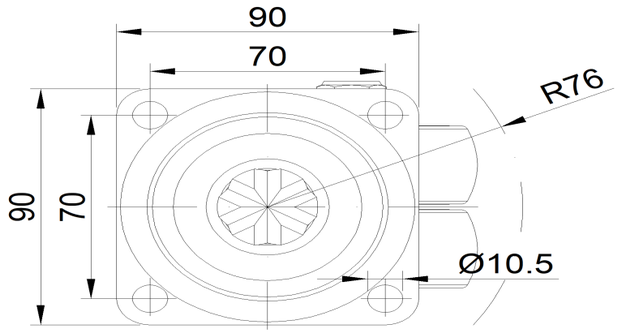

* For any deviation between metric and imperial spec, please refer to the metric spec.

© Copyright 2026 DershengInternational www.dersheng.com