1165-5 AMR/AGV- 5 Pressed Steel Caster - Single Wheel Series (Medium/Light Duty)

Anti-static HPU (black round) Wheel Diameter x Wheel Width 75 x 30 mm

EAN

KS-11650305752163



Picture may differ from original product

Drawings are for reference only and may differ from the product

Technical Data

◉ Imperial ○ Metric

Wheel Diameter	3 "
Wheel Width	1-3/16 "
Wheel Bearing	Wheels With Ball Bearings
Plate Size	4-9/16 " x 4 "
Bolt Hole Spacing	3-5/16 " x 2-15/16 "
Plate Hole	13/16 " x 3/8 "
Offset	1 "
Swivel Interference	6 "
Overall Height	4-1/4 "
Swivel Radius	3 "
Hardness Of Tread	92±5° Shore A
Load Capacity (Dynamic)	661lbs
Load Capacity (Static)	992lbs
Temperature	-4°F to +158°F
Fork Type	Swivel Caster
Stainless	N/A
Electrical Conductivity	N/A
Anti-Static	Y 10^6/~10^9/Ω
Weight	4.6lbs
Standard	ISO22883

Advantages at a glance

Rolling Resistance	●●●●●
Operating Noise	●●●●○
Floor Surface Preservation	●●●●●

Dimensions

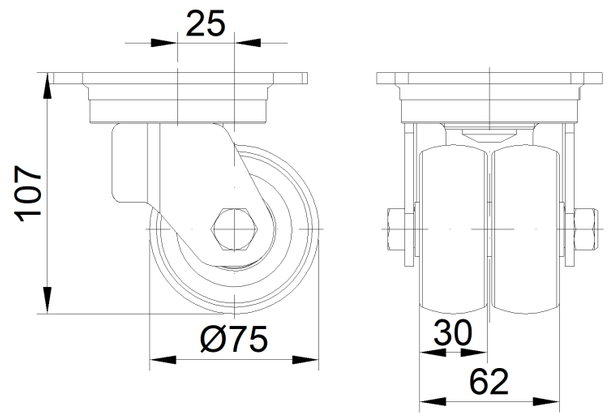

Mounting

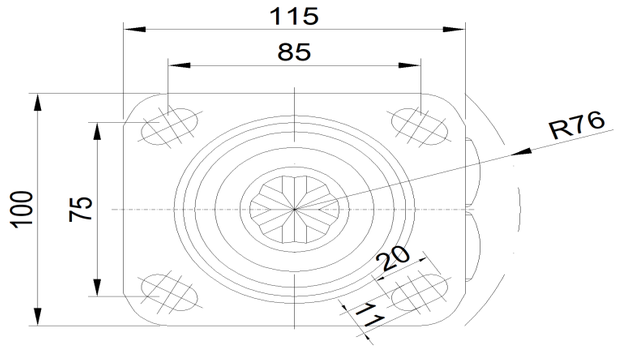

* For any deviation between metric and imperial spec, please refer to the metric spec.

© Copyright 2026 DershengInternational www.dersheng.com