# 1165-5 AMR/AGV- 5 Pressed Steel Caster - Single Wheel Series (Medium/Light Duty)

HPU (orange round) Wheel Diameter x Wheel Width 75 x 30 mm

EAN

KS-11650305752723

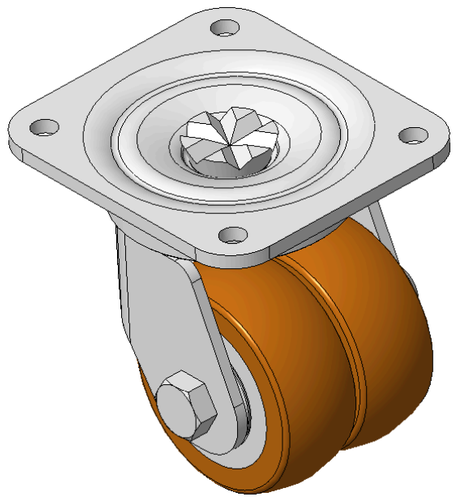

Picture may differ from original product

Drawings are for reference only and may differ from the product

## Technical Data

◉ Metric ○ Imperial

| | |
|---|---|
| Wheel Diameter | 75mm |
| Wheel Width | 30mm |
| Wheel Bearing | Wheels With Ball Bearings |
| Plate Size | 110 x 100mm |
| Bolt Hole Spacing | 85 x 75mm |
| Plate Hole | 9mm |
| Offset | 20.5mm |
| Swivel Interference | 152mm |
| Overall Height | 109mm |
| Swivel Radius | 76mm |
| Hardness Of Tread | 92±5° Shore A |
| Load Capacity (Dynamic) | 300kgs |
| Load Capacity (Static) | 450kgs |
| Temperature | -20°C to +70°C |
| Fork Type | Swivel Caster |
| Stainless | N/A |
| Electrical Conductivity | N/A |
| Anti-Static | N/A |
| Weight | 2.09kgs |
| Standard | ISO22883 |

## Advantages at a glance

| | |
|---|---|
| Rolling Resistance | ●●●●● |
| Operating Noise | ●●●●○ |
| Floor Surface Preservation | ●●●●● |

## Dimensions

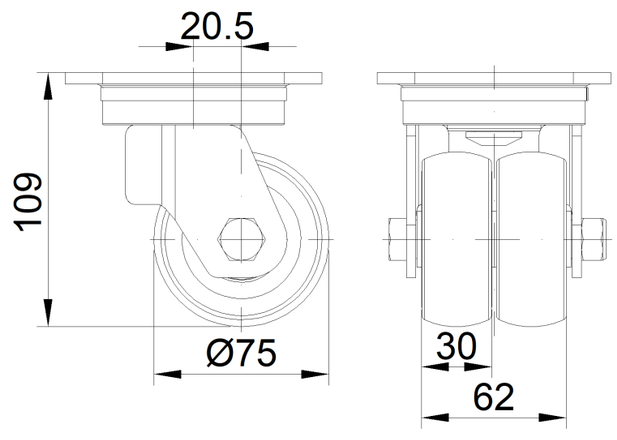


## Mounting

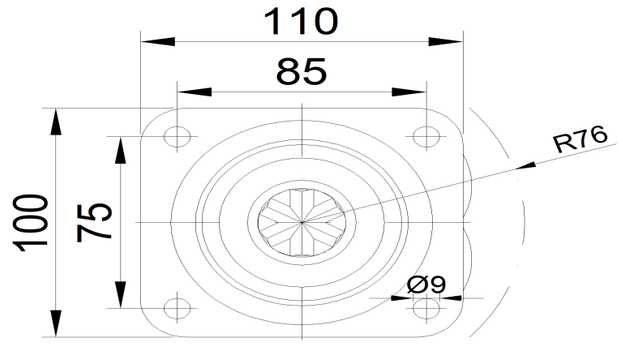


* For any deviation between metric and imperial spec, please refer to the metric spec.

© Copyright 2026 DershengInternational www.dersheng.com