1165-2 Heavy Duty AMR/AGV-2 Caster Series

ZQPU (brown round) Wheel Diameter x Wheel Width 100 x 22 (46.5) mm

EAN

KS-11650402801023

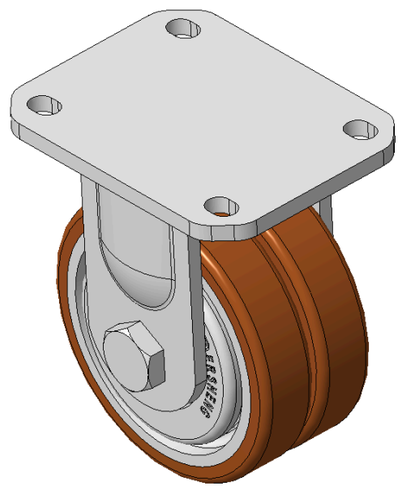

Drawings are for reference only and may differ from the product

Picture may differ from original product

Technical Data

◉ Metric ○ Imperial

Wheel Diameter	100mm
Wheel Width	22mm
Wheel Bearing	Wheels With Ball Bearings
Plate Size	110 x 85mm
Bolt Hole Spacing	80 x 60mm
Plate Hole	12 x 9mm
Overall Height	125mm
Hardness Of Tread	92±5° Shore A
Load Capacity (Dynamic)	400kgs
Load Capacity (Static)	600kgs
Temperature	-20°C to +70°C
Fork Type	Rigid Caster
Stainless	N/A
Electrical Conductivity	N/A
Anti-Static	N/A
Weight	2.58kgs
Standard	ISO22883

Advantages at a glance

Rolling Resistance	●●●●●
Operating Noise	●●●●●
Floor Surface Preservation	●●●●●

Dimensions

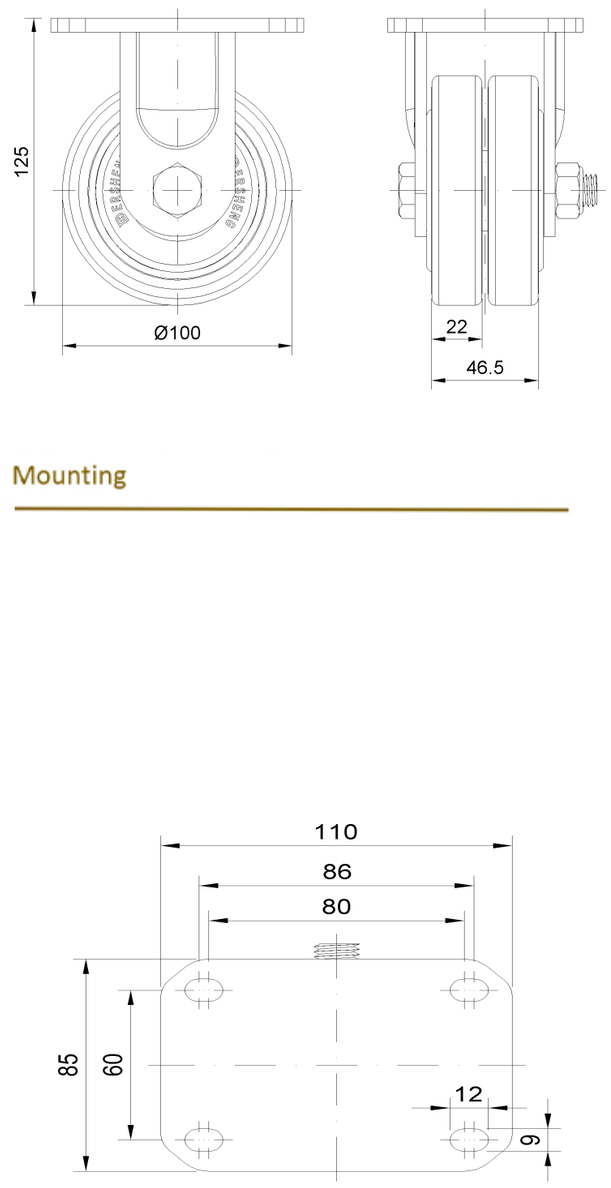

Mounting

* For any deviation between metric and imperial spec, please refer to the metric spec.

© Copyright 2026 DershengInternational www.dersheng.com