# 1165-2 Heavy Duty AMR/AGV-2 Caster Series

Anti-static ZQPU (milling black) Wheel Diameter x Wheel Width 100 x 22（46.5） mm

EAN

KS-11650402801713

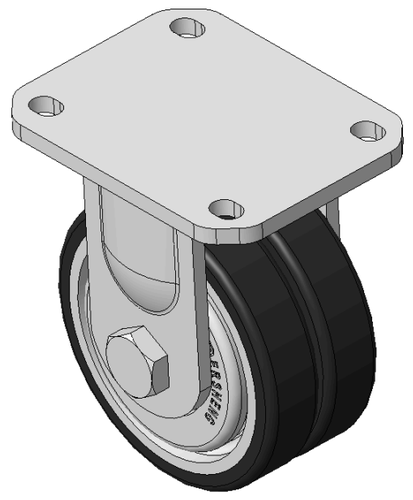

Drawings are for reference only and may differ from the product

Picture may differ from original product

## Technical Data

◉ Imperial ○ Metric

| | |
|---|---|
| Wheel Diameter | 4 " |
| Wheel Width | 7/8 " |
| Wheel Bearing | Wheels With Ball Bearings |
| Plate Size | 4-3/8 " x 3-7/16 " |
| Bolt Hole Spacing | 3-3/16 " x 2-7/16 " |
| Plate Hole | 1/2 " x 23/64 " |
| Overall Height | 5 " |
| Hardness Of Tread | 77±5° Shore A |
| Load Capacity (Dynamic) | 772lbs |
| Load Capacity (Static) | 1157lbs |
| Temperature | -4°F to +158°F |
| Fork Type | Rigid Caster |
| Stainless | N/A |
| Electrical Conductivity | N/A |
| Anti-Static | Y 10^6/~10^9/Ω |
| Weight | 5.7lbs |
| Standard | ISO22883 |

## Advantages at a glance

| | |
|---|---|
| Rolling Resistance | ●●●●● |
| Operating Noise | ●●●●● |
| Floor Surface Preservation | ●●●●● |

## Dimensions

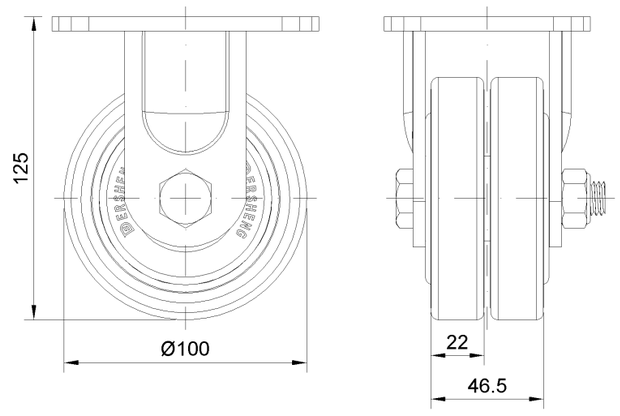


## Mounting

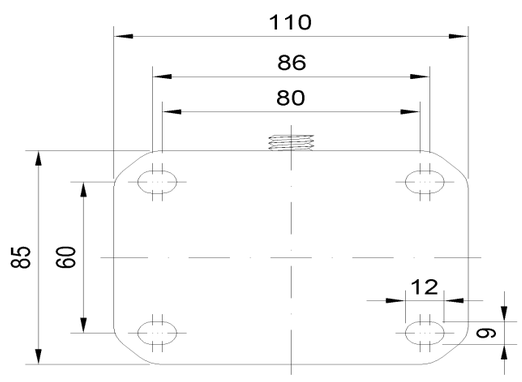


* For any deviation between metric and imperial spec, please refer to the metric spec.

© Copyright 2026 DershengInternational www.dersheng.com