1165-4 1165 Series — AMR/AGV-4 Single Precision Ball Bearing Caster (Medium Duty)Series

PPR Conductive Wheel (Dark Gray/Light Gray) Wheel Diameter×Wheel Width 100×24.5mm

EAN

KS-11650404172313

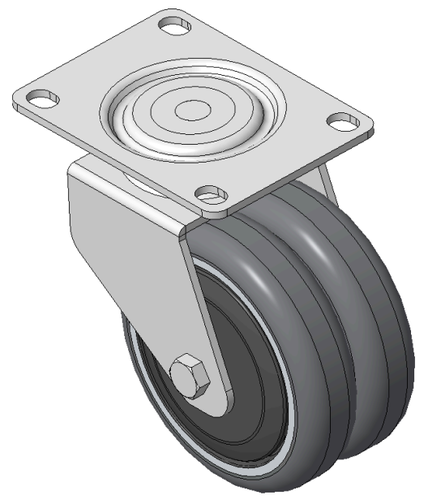

Picture may differ from original product

Drawings are for reference only and may differ from the product

Technical Data

◉ Imperial ○ Metric

Wheel Diameter	4 "
Wheel Width	1 "
Wheel Bearing	Wheels With Ball Bearings
Plate Size	4-1/16 " x 3 "
Bolt Hole Spacing	3-3/16 " x 2-7/16 "
Plate Hole	1/2 " x 23/64 "
Offset	1-5/16 "
Swivel Interference	6-13/16 "
Overall Height	5 "
Swivel Radius	3-7/16 "
Hardness Of Tread	87±5° Shore A
Load Capacity (Dynamic)	165lbs
Load Capacity (Static)	248lbs
Temperature	-4°F to +140°F
Fork Type	Swivel Caster
Stainless	N/A
Electrical Conductivity	Y 10^3/～10^4/Ω
Anti-Static	N/A
Weight	4.8lbs
Standard	ISO22883

Advantages at a glance

Rolling Resistance	●●●●○
Operating Noise	●●●●○
Floor Surface Preservation	●●●●●

Dimensions

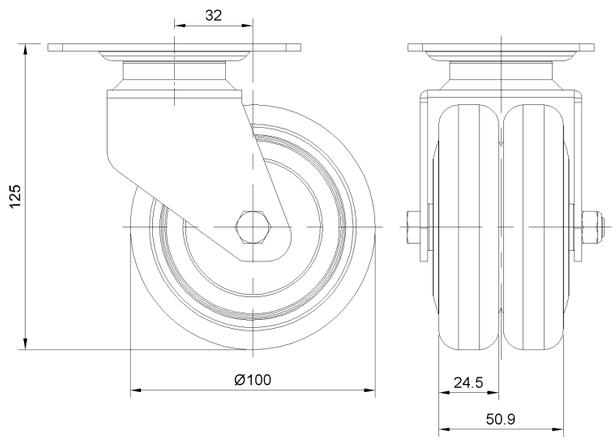

Mounting

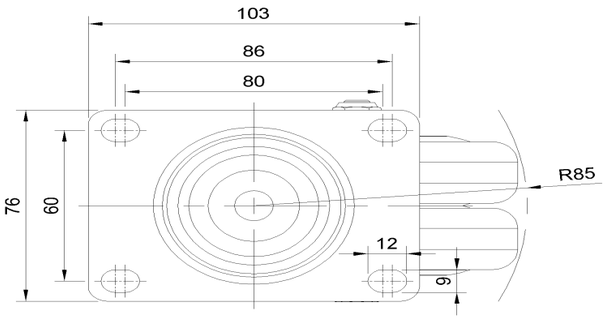

* For any deviation between metric and imperial spec, please refer to the metric spec.

© Copyright 2026 DershengInternational www.dersheng.com