AMR/AGV- 7 Shock Absorbing Caster (Medium Duty)

W Resolute(Pearlescent dark gray) Wheel Diameter × Wheel Width 100 x 31mm

EAN

KS-11650407452113

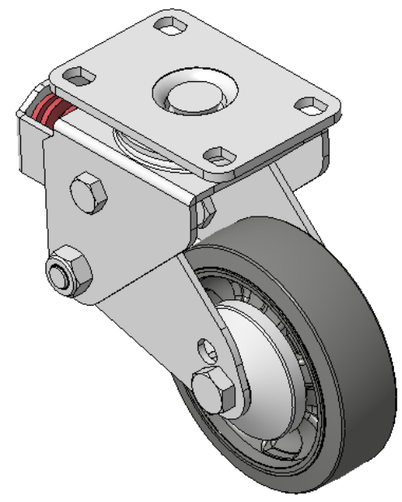

Picture may differ from original product

Drawings are for reference only and may differ from the product

Technical Data

◉ Imperial ○ Metric

Wheel Diameter	4 "
Wheel Width	1-1/4 "
Wheel Bearing	Wheels With Ball Bearings
Plate Size	3-13/16 " x 2-9/16 "
Bolt Hole Spacing	3 " x 1-13/16 "
Plate Hole	1/2 " x 23/64 "
Offset	1-1/2 "
Swivel Interference	7-1/4 "
Overall Height	5-7/8 "
Swivel Radius	3-5/8 "
Hardness Of Tread	72±5° Shore A
Load Capacity (Dynamic)	243lbs
Load Capacity (Static)	364lbs
Temperature	-4°F to +140°F
Fork Type	Swivel Caster
Stainless	N/A
Electrical Conductivity	N/A
Anti-Static	N/A
Weight	3.7lbs
Standard	ISO22883

Advantages at a glance

Rolling Resistance	●●●●●
Operating Noise	●●●●●
Floor Surface Preservation	●●●●●

Dimensions

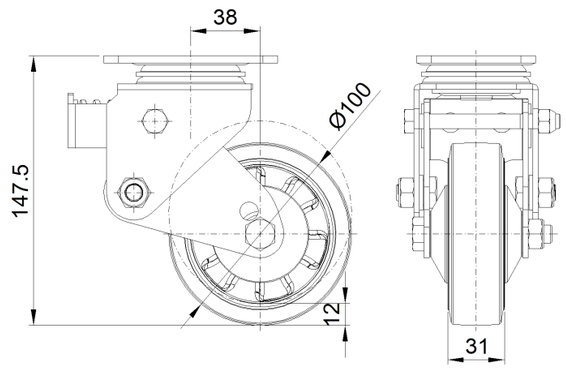

Mounting

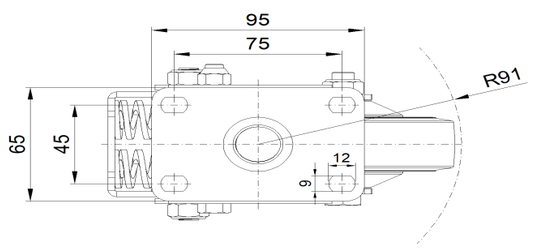

* For any deviation between metric and imperial spec, please refer to the metric spec.

© Copyright 2026 DershengInternational www.dersheng.com