1165-4 1165 Series — AMR/AGV-4 Single Precision Ball Bearing Caster (Medium Duty)Series

Classic Resolute (Pearlescent Dark Gray) Wheel Diameter×Wheel Width 125×24.5mm

EAN

KS-11650504452313

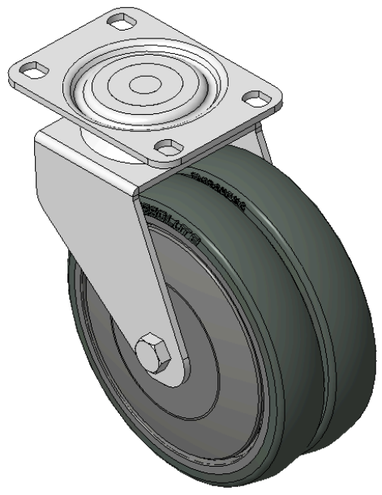

Drawings are for reference only and may differ from the product

Picture may differ from original product

Technical Data

◉ Metric ○ Imperial

Wheel Diameter	125mm
Wheel Width	24.5mm
Wheel Bearing	Wheels With Ball Bearings
Plate Size	92 x 66mm
Bolt Hole Spacing	75 x 45mm
Plate Hole	11.1 x 8.6mm
Offset	37mm
Swivel Interference	203mm
Overall Height	150mm
Swivel Radius	101.5mm
Hardness Of Tread	72±5° Shore A
Load Capacity (Dynamic)	130kgs
Load Capacity (Static)	195kgs
Temperature	-20°C to +60°C
Fork Type	Swivel Caster
Stainless	N/A
Electrical Conductivity	N/A
Anti-Static	N/A
Weight	2.22kgs
Standard	ISO22883

Advantages at a glance

Rolling Resistance	●●●●●
Operating Noise	●●●●●
Floor Surface Preservation	●●●●●

Dimensions

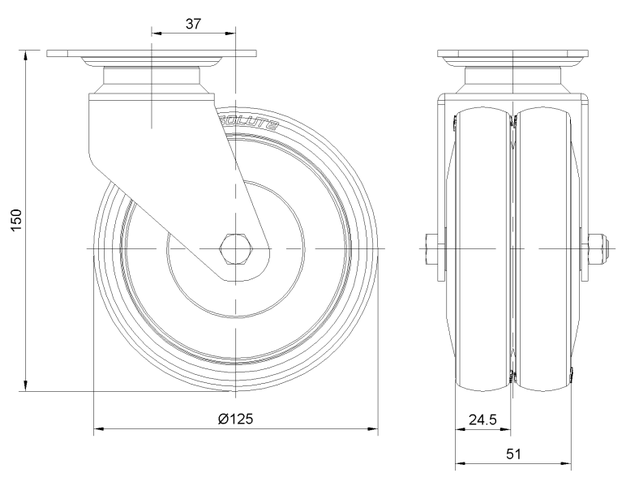

Mounting

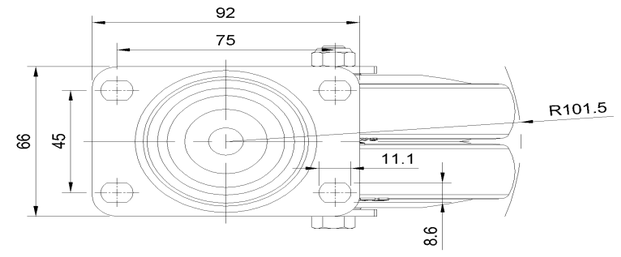

* For any deviation between metric and imperial spec, please refer to the metric spec.

© Copyright 2026 DershengInternational www.dersheng.com