# 1165-4 1165 Series — AMR/AGV-4 Single Precision Ball Bearing Caster (Medium Duty)Series

Classic Resolute (Pearlescent Dark Gray) Wheel Diameter×Wheel Width 125×24.5mm

EAN

KS-11650504452323

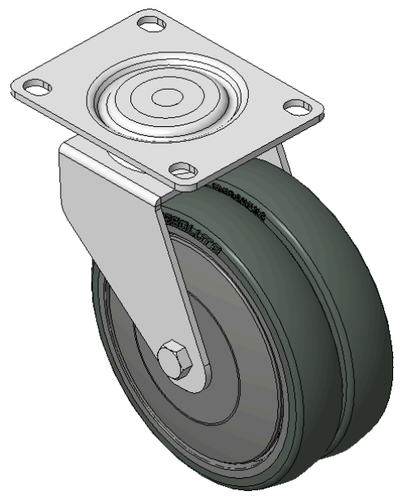

Picture may differ from original product

Drawings are for reference only and may differ from the product

## Technical Data

◉ Imperial ○ Metric

| | |
|---|---|
| Wheel Diameter | 5 " |
| Wheel Width | 1 " |
| Wheel Bearing | Wheels With Ball Bearings |
| Plate Size | 4-1/16 " x 3 " |
| Bolt Hole Spacing | 3-3/16 " x 2-7/16 " |
| Plate Hole | 1/2 " x 23/64 " |
| Offset | 1-1/2 " |
| Swivel Interference | 8 " |
| Overall Height | 6 " |
| Swivel Radius | 4 " |
| Hardness Of Tread | 72±5° Shore A |
| Load Capacity (Dynamic) | 287lbs |
| Load Capacity (Static) | 430lbs |
| Temperature | -4°F to +140°F |
| Fork Type | Swivel Caster |
| Stainless | N/A |
| Electrical Conductivity | N/A |
| Anti-Static | N/A |
| Weight | 5.0lbs |
| Standard | ISO22883 |

## Advantages at a glance

| | |
|---|---|
| Rolling Resistance | ●●●●● |
| Operating Noise | ●●●●● |
| Floor Surface Preservation | ●●●●● |

## Dimensions

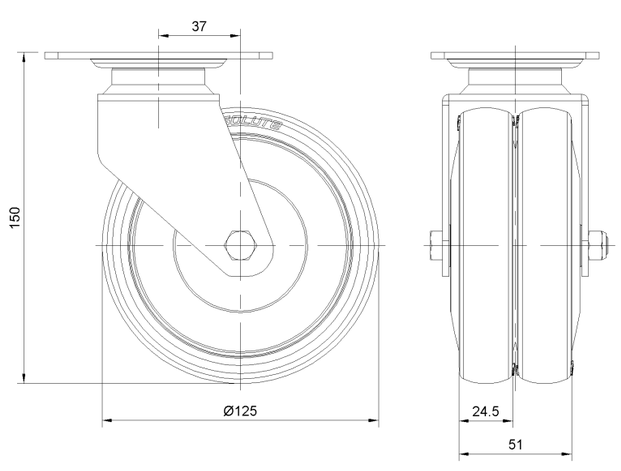


## Mounting

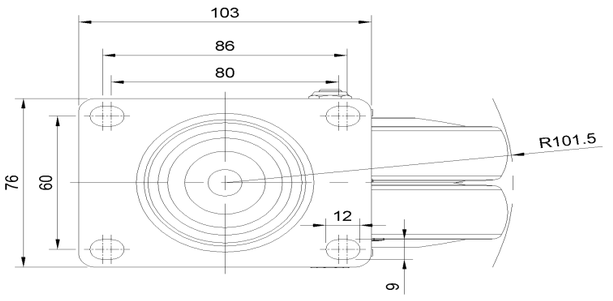


* For any deviation between metric and imperial spec, please refer to the metric spec.

© Copyright 2026 DershengInternational www.dersheng.com