Product Information Sheet

Resolute Rubber Wheel Series

Resolute (Pearlescent dark gray) Wheel Diameter x Wheel Width 125 x 31mm

A

KS-12024505131473

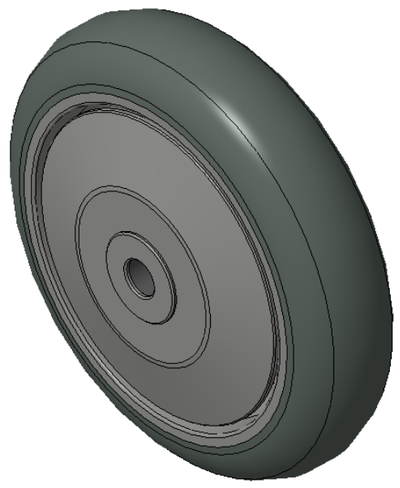

Picture may differ from original product

Easy to Floor Surface Preservation, Non-Markings, Easy To Maneuver, and can withstand heavy loads.
Low rolling and Swivel Resistance, resistant to corrosion from many corrosive substances.
Color: Pearlescent dark gray, with Dust Cap, Plain Bearing.

Wheel Center: High-quality impact-resistant polypropylene
Outer packaging: Thermoplastic rubber elastomer (TPR)
Bearing: center tube

Drawings are for reference only and may differ from the product

Technical Data

◉ Metric ○ Imperial

Wheel Diameter(D)	125mm
Wheel Width(T2)	31mm
Wheel Bearing	Plain Bearing
Axle Bore(d)	10mm
Axle Bore(S)	—
Bearing Bore Depth(t)	—
Hub Lenth(T1)	42mm
Hardness Of Tread	72±5° Shore A
Load Capacity (Dynamic)	147kgs
Load Capacity (Static)	220.5kgs
Temperature	-20°C to +60°C
Electrical Conductivity	N/A
Anti-Static	N/A
Weight	0.25kgs
Standard	ISO22883

Advantages at a glance

Rolling Resistance	● ● ● ● ●
Operating Noise	● ● ● ● ●
Floor Surface Preservation	● ● ● ● ●

2D Dimensional Drawing of Single Wheel

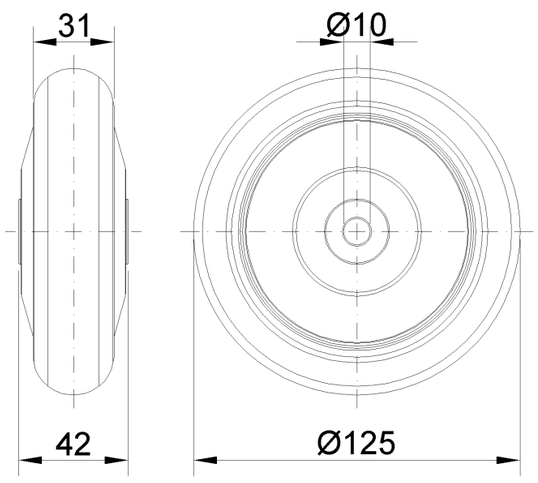

* For any deviation between metric and imperial spec, please refer to the metric spec.

© Copyright 2025 DershengInternational www.dersheng.com