Product Data Sheet

W Resolute Wheel Series

W All-Effective Wheel (Pearlescent Light Gray) Wheel Diameter × Wheel Width 202 × 50mm

A

KS-1202450820W177

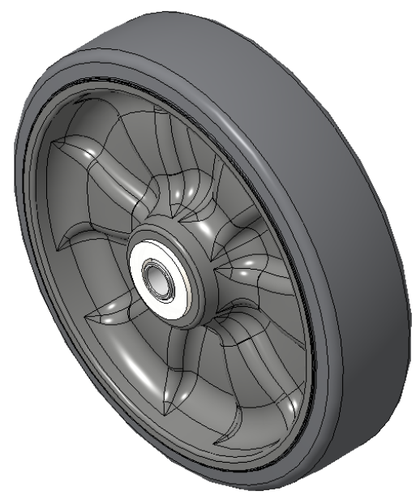

Picture may differ from original product

Easy to Floor Surface Preservation, Non-Markings, Easy To Maneuver, and can withstand heavy loads.
Low rolling and Swivel Resistance, resistant to corrosion from many corrosive substances.
Color: Pearlescent light gray, includes bearings and pads.

Wheel Tread: High-quality impact-resistant polypropylene

Outer packaging: Thermoplastic rubber elastomer (TPR)

Bearings: Precision bearings

Drawings are for reference only and may differ from the product

Technical Data

◉ Imperial ○ Metric

Wheel Diameter(D)	8 "
Wheel Width(T2)	2 "
Wheel Bearing	Ball Bearing
Axle Bore(d)	9/16 "
Axle Bore(S)	—
Bearing Bore Depth(t)	—
Hub Lenth(T1)	2-1/4 "
Hardness Of Tread	72±5° Shore A
Load Capacity (Dynamic)	675lbs
Load Capacity (Static)	1012lbs
Temperature	-4°F to +140°F
Electrical Conductivity	N/A
Anti-Static	N/A
Weight	3.9lbs
Standard	ISO22883

Advantages at a glance

Rolling Resistance	● ● ● ● ●
Operating Noise	● ● ● ● ●
Floor Surface Preservation	● ● ● ● ●

2D Dimensional Drawing of Single Wheel

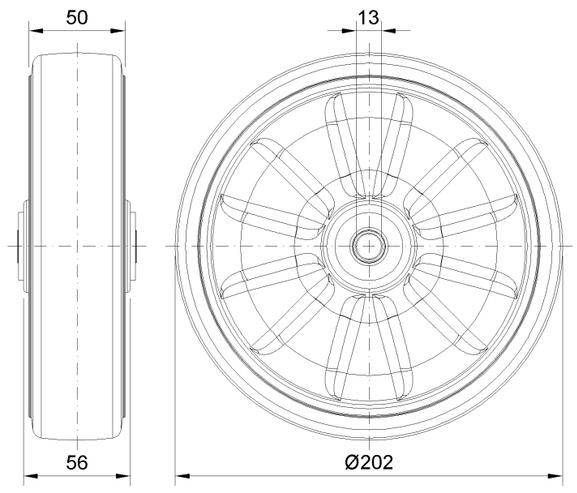

* For any deviation between metric and imperial spec, please refer to the metric spec.

© Copyright 2025 DershengInternational www.dersheng.com