Product Data Sheet

1112 2" Wide General Purposes Caster Series

NBR Wheel Diameter × Wheel Width 150 x 40 mm

EAN

TW-4111206004006

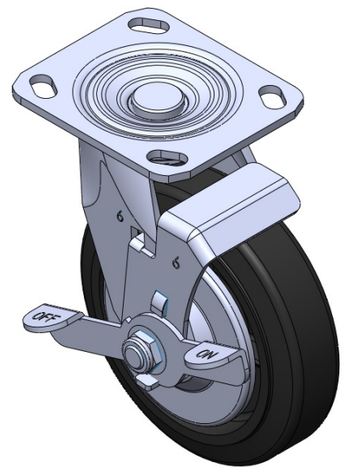

Picture may differ from original product

Casters with Side Brakes and With locking system. Welded Caster Fork. Zine-Plated. Mounting Type - Top Plate (with iron cover). Cast Iron core with High Quality Polyurethane Wheel Tread. Black finish. Bearings: Ball Bearings.

Wheel surface: high-quality elastic rubber

Wheel Center: iron core/cast iron core

Drawings are for reference only and may differ from the product

Technical Data

◉ Metric ○ Imperial

Wheel Diameter	150mm
Wheel Width	40mm
Wheel Bearing	Wheel With Annual Ball Bearing
Plate Size	115 x 100mm
Bolt Hole Spacing	85 x 70mm
Plate Hole	20 x 11mm
Offset	35mm
Swivel Interference	220mm
Overall Height	190mm
Swivel Radius	110mm
Hardness Of Tread	85±5° Shore A
Load Capacity (Dynamic)	250kgs
Load Capacity (Static)	375kgs
Temperature	-20°C to +80°C
Fork Type	Swivel Caster With Side Brake
Stainless	N/A
Electrical Conductivity	N/A
Anti-Static	N/A
Weight	3.0kgs
Standard	ISO22883

Advantages at a glance

Rolling Resistance	● ● ● ○ ○
Operating Noise	● ● ● ● ○
Floor Surface Preservation	● ● ● ● ○

Dimensions

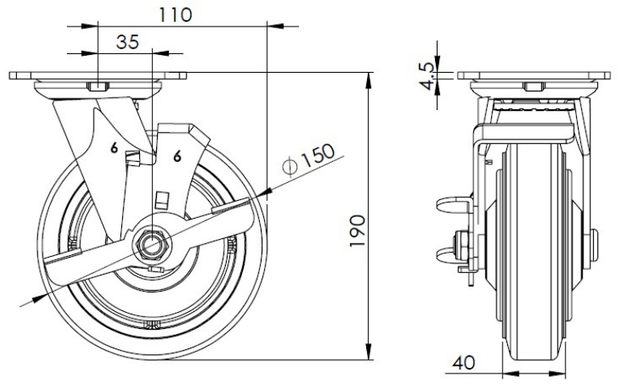

Mounting

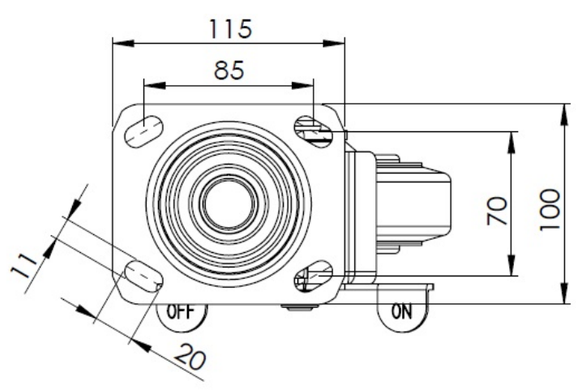

* For any deviation between metric and imperial spec, please refer to the metric spec.

© Copyright 2025 DershengInternational www.dersheng.com