1116-SS-MI Medium Duty Institutional Stainless Steel Caster Series

AQPU (grey) wheel Diameter × Wheel Width 100 x 31mm

EAN

TW-4111604001048

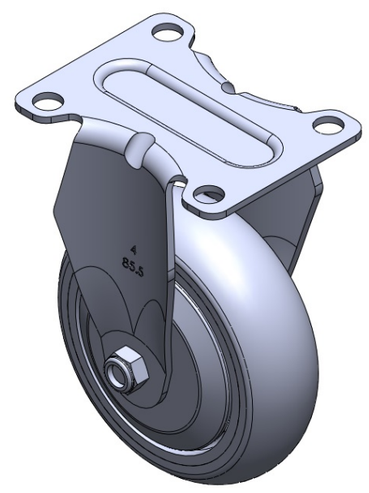

Drawings are for reference only and may differ from the product

Picture may differ from original product

Technical Data

◉ Metric ○ Imperial

Wheel Diameter	100mm
Wheel Width	31mm
Wheel Bearing	Wheels With Ball Bearings
Plate Size	92 x 70mm
Bolt Hole Spacing	72 x 53mm
Plate Hole	10mm
Overall Height	135mm
Hardness Of Tread	77±5° Shore A
Load Capacity (Dynamic)	135kgs
Load Capacity (Static)	202.5kgs
Temperature	-20°C to +70°C
Fork Type	Rigid Caster
Stainless	Y
Electrical Conductivity	N/A
Anti-Static	N/A
Weight	0.50kgs
Standard	ISO22883

Advantages at a glance

Rolling Resistance	● ● ● ● ●
Operating Noise	● ● ● ● ●
Floor Surface Preservation	● ● ● ● ●

Dimensions

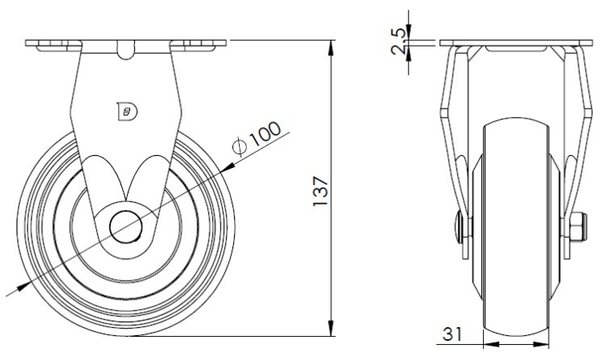

Mounting

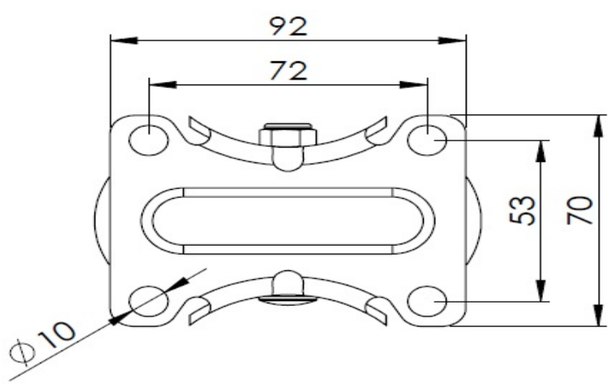

* For any deviation between metric and imperial spec, please refer to the metric spec.

© Copyright 2026 DershengInternational www.dersheng.com