1116-SS-MI Medium Duty Institutional Stainless Steel Caster Series

PPR (S) Wheel Diameter × Wheel Width 125 x 31mm

EAN

TW-4111605002074

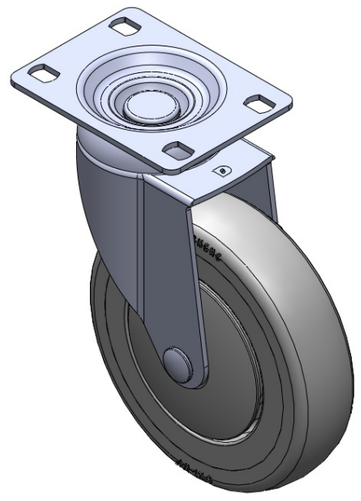

Picture may differ from original product

Drawings are for reference only and may differ from the product

Technical Data

◉ Imperial ○ Metric

Wheel Diameter	5 "
Wheel Width	1-1/4 "
Wheel Bearing	Wheels With Ball Bearings
Plate Size	3-5/8 " x 2-13/16 "
Bolt Hole Spacing	2-7/8 " x 2-1/8 "
Plate Hole	1/2 " x 23/64 "
Offset	1-9/16 "
Swivel Interference	8 "
Overall Height	6-1/2 "
Swivel Radius	4 "
Hardness Of Tread	82±5° Shore A
Load Capacity (Dynamic)	243lbs
Load Capacity (Static)	364lbs
Temperature	-4°F to +140°F
Fork Type	Swivel Caster
Stainless	Y
Electrical Conductivity	N/A
Anti-Static	N/A
Weight	1.9lbs
Standard	ISO22883

Advantages at a glance

Rolling Resistance	● ● ● ● ○
Operating Noise	● ● ● ● ○
Floor Surface Preservation	● ● ● ● ●

Dimensions

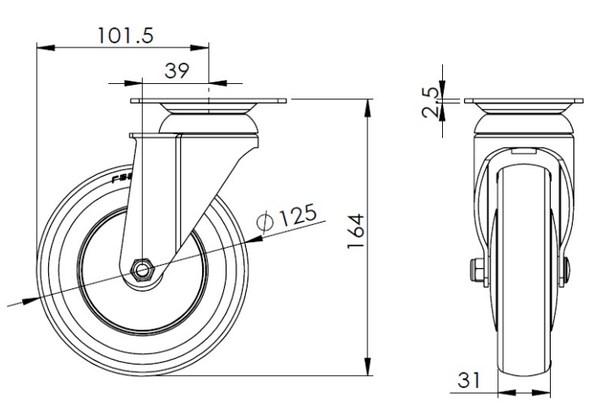

Mounting

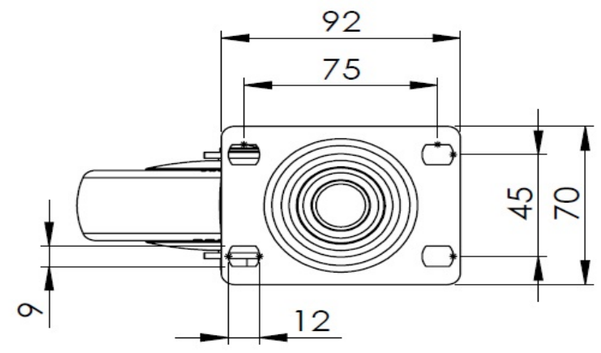

* For any deviation between metric and imperial spec, please refer to the metric spec.

© Copyright 2026 DershengInternational www.dersheng.com