Product Data Sheet

1130 Medium Duty General Purposes Caster Series

PP Wheel Diameter × Wheel Width 75 x 32mm

EAN

TW-4113003002033

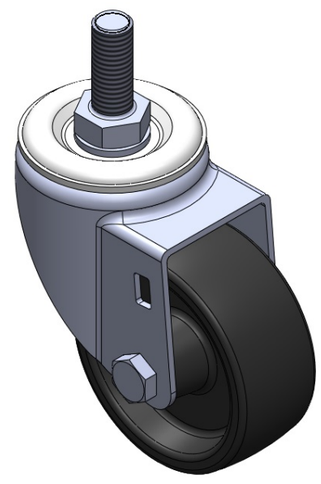

Picture may differ from original product

Swivel Caster with Riveted Stamping Fork - 1/2-12 threads
Zine-Plated, Mounting Type - Top Plate
Polypropylene core and Wheel Tread
Black, Plain Bearing.

Wheel tread: PP polypropylene

Wheel Center: PP polypropylene

Drawings are for reference only and may differ from the product

Technical Data

◉ Metric ○ Imperial

Wheel Diameter	75mm
Wheel Width	32mm
Wheel Bearing	Wheel With Plain Bearing
Threaded Stem	1/2 " -12牙
Threaded Size	32mm
Offset	35mm
Swivel Interference	146mm
Overall Height	108mm
Swivel Radius	73mm
Hardness Of Tread	65±5° Shore D
Load Capacity (Dynamic)	90kgs
Load Capacity (Static)	135kgs
Temperature	-10°C to +60°C
Fork Type	Swivel Caster
Stainless	N/A
Electrical Conductivity	N/A
Anti-Static	N/A
Weight	0.50kgs
Standard	ISO22883

Advantages at a glance

Rolling Resistance	● ● ● ● ●
Operating Noise	● ● ● ○ ○
Floor Surface Preservation	● ● ● ○ ○

Dimensions

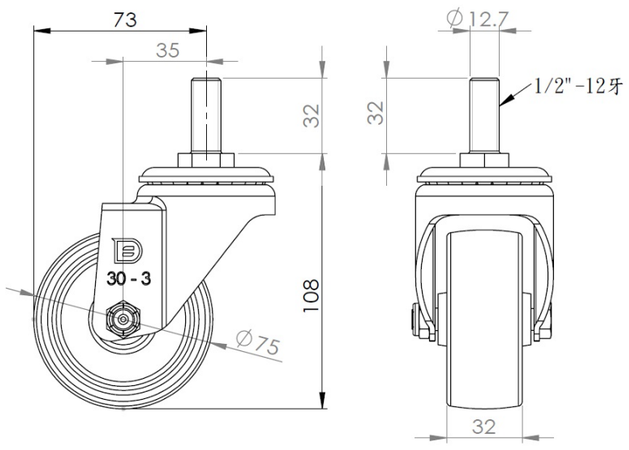

Mounting

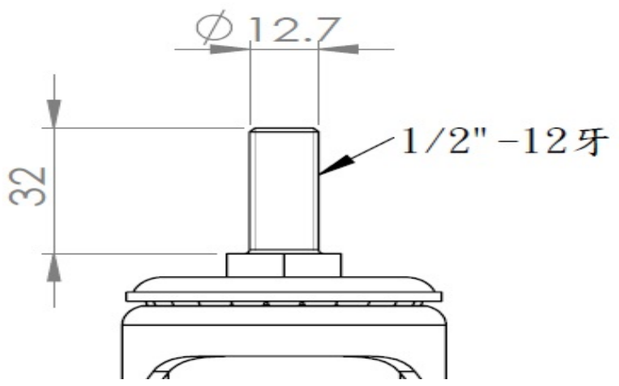

* For any deviation between metric and imperial spec, please refer to the metric spec.

© Copyright 2025 DershengInternational www.dersheng.com