Product Data Sheet

# 1153 Heavy Duty 2" Wide General Purposes Caster Series

AQPU (grey) Wheel Diameter × Wheel Width 150 x 42mm

EAN

TW-4115306002046

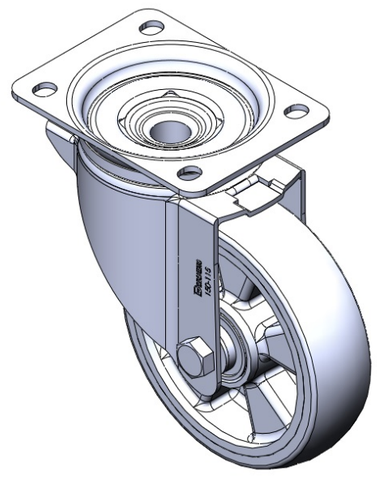

Picture may differ from original product

Swivel Caster with Riveted Fork and Stamping Fork.
Zine-Plated, Mounting Type - Top Plate.
Aluminum wheel center with High Quality Polyurethane Wheel Tread.
Gray, Bearing—Ball Bearings.

Wheel tread: high quality polyurethane

Wheel Center: aluminum core

Drawings are for reference only and may differ from the product

## Technical Data

◉ Metric ○ Imperial

| | |
|---|---|
| Wheel Diameter | 150mm |
| Wheel Width | 42mm |
| Wheel Bearing | Wheels With Ball Bearings |
| Plate Size | 137 x 105mm |
| Bolt Hole Spacing | 105 x 77.5mm |
| Plate Hole | 13.5 x 11mm |
| Offset | 55mm |
| Swivel Interference | 260mm |
| Overall Height | 190mm |
| Swivel Radius | 130mm |
| Hardness Of Tread | 77±5° Shore A |
| Load Capacity (Dynamic) | 350kgs |
| Load Capacity (Static) | 525kgs |
| Temperature | -20°C to +70°C |
| Fork Type | Swivel Caster |
| Stainless | N/A |
| Electrical Conductivity | N/A |
| Anti-Static | N/A |
| Weight | 2.00kgs |
| Standard | ISO22883 |

## Advantages at a glance

| | |
|---|---|
| Rolling Resistance | ● ● ● ● ● |
| Operating Noise | ● ● ● ● ● |
| Floor Surface Preservation | ● ● ● ● ● |

## Dimensions

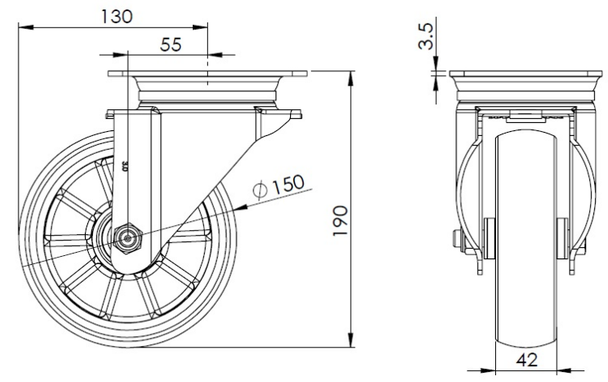


## Mounting

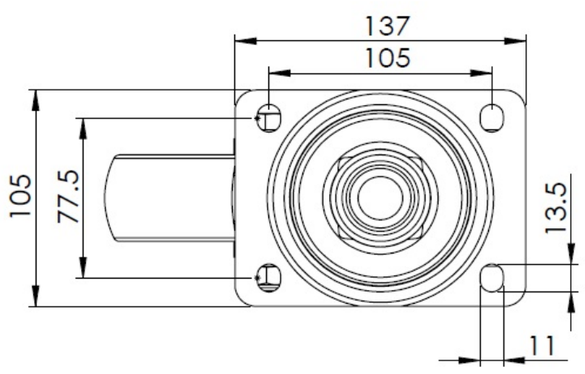


* For any deviation between metric and imperial spec, please refer to the metric spec.

© Copyright 2025 DershengInternational www.dersheng.com