Product Data Sheet

1153-1 Heavy Duty 2" Wide General Purposes Caster (European Style) Series

Rubber Wheel Diameter × Wheel Width 200 x 50mm

EAN

TW-4115308001016

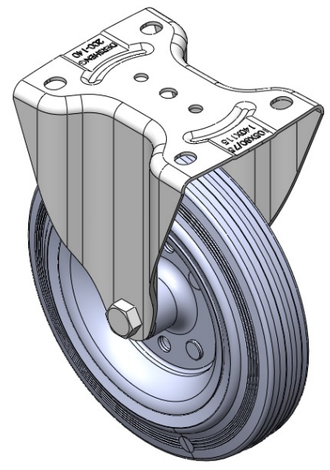

Picture may differ from original product

Rigid Caster with Stamping Fabricated Caster Fork
Zine-Plated, Mounting Type - Top Plate, and included cover
Cast Iron core with High-Quality Resilient Rubber Wheel Tread
Bearings—Ball Bearings.

Wheel surface: high-quality elastic rubber

Wheel Center: iron core/cast iron core

Drawings are for reference only and may differ from the product

Technical Data

◉ Metric ○ Imperial

Wheel Diameter	200mm
Wheel Width	50mm
Wheel Bearing	Wheels With Ball Bearings
Plate Size	140 x 115mm
Bolt Hole Spacing	105 x 77.5mm
Plate Hole	13.5 x 11mm
Overall Height	240mm
Hardness Of Tread	80±5° Shore A
Load Capacity (Dynamic)	205kgs
Load Capacity (Static)	307.5kgs
Temperature	-20°C to +120°C
Fork Type	Rigid Caster
Stainless	N/A
Electrical Conductivity	N/A
Anti-Static	N/A
Weight	2.00kgs
Standard	ISO22883

Advantages at a glance

Rolling Resistance	● ● ● ○ ○
Operating Noise	● ● ● ● ○
Floor Surface Preservation	● ● ● ● ○

Dimensions

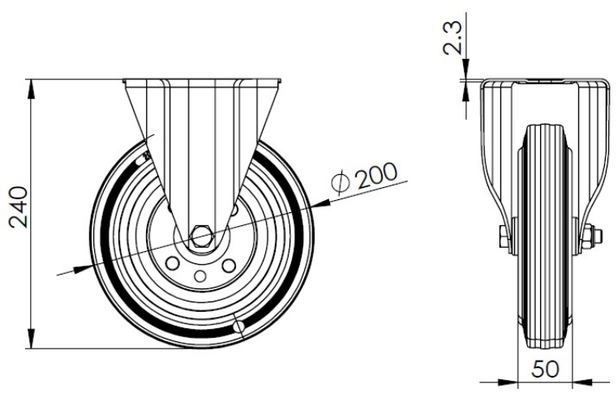

Mounting

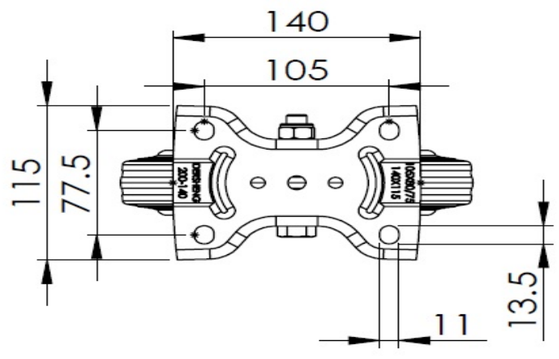

* For any deviation between metric and imperial spec, please refer to the metric spec.

© Copyright 2025 DershengInternational www.dersheng.com