1109 Medium Duty/Low Profile Business Machine Caster Series

QPU (blue round) Wheel Diameter × Wheel Width 50 × 45mm

EAN

YJ-11090200535013

Portable Casters, Threaded Stem Stamping Fork—3/8-16UNC Zine-Plated surface, Mounting Type - Threaded Stem device Cast Iron wheel center, High Quality Polyurethane Wheel Tread Blue, Bearing—Ball Bearings.

Wheel surface: High-quality polyurethane

Wheel Center: iron core

Drawings are for reference only and may differ from the product

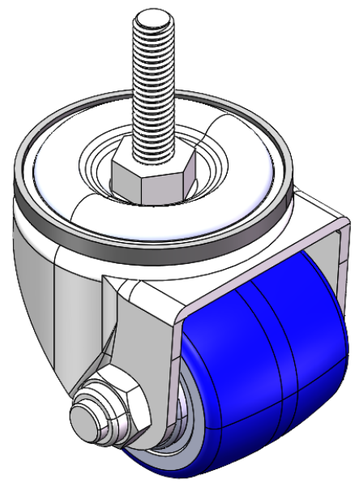

Picture may differ from original product

Technical Data

◉ Imperial ○ Metric

Wheel Diameter	2 "
Wheel Width	1-13/16 "
Wheel Bearing	Wheels With Ball Bearings
Threaded Stem	3/8 " -16UNC
Threaded Length	1-1/2 "
Offset	11/16 "
Swivel Interference	3-7/8 "
Overall Height	2-13/16 "
Swivel Radius	1-15/16 "
Hardness Of Tread	87±5° Shore A
Load Capacity (Dynamic)	220lbs
Load Capacity (Static)	331lbs
Temperature	-4°F to +158°F
Fork Type	Swivel Caster
Stainless	N/A
Electrical Conductivity	N/A
Anti-Static	N/A
Weight	1.9lbs
Standard	ISO22883

Advantages at a glance

Rolling Resistance	● ● ● ● ●
Operating Noise	● ● ● ● ●
Floor Surface Preservation	● ● ● ● ●

Dimensions

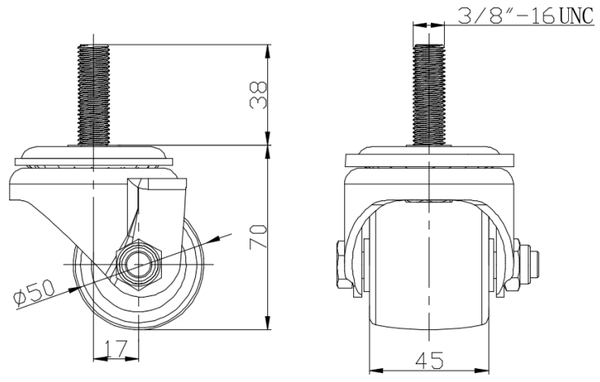

Mounting

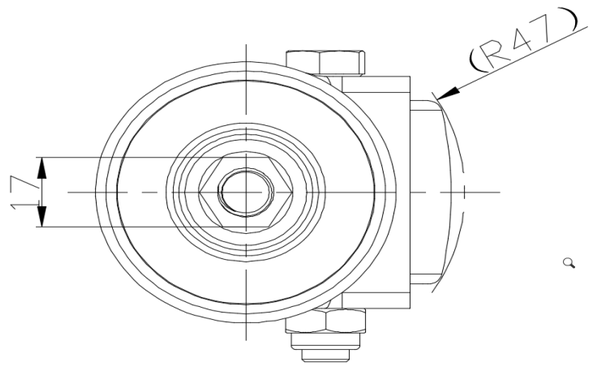

* For any deviation between metric and imperial spec, please refer to the metric spec.

© Copyright 2026 DershengInternational www.dersheng.com