Product Information Sheet

1109 Medium Duty/Low Profile Business Machine Caster Series

ZQPU (Milled Blue) Wheel Diameter × Wheel Width 50× 20（41.5） mm

EAN

YJ-11090200802073

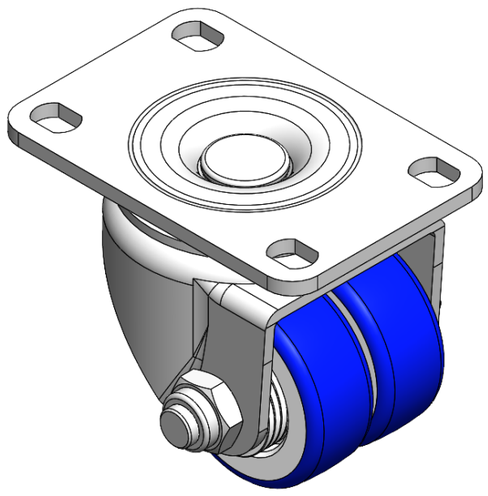

Picture may differ from original product

Portable Casters, Riveted and Stamping Top Plate—high-grade perforated design
Zine-Plated surface, Mounting Type - Top Plate device
Cast Iron Wheel Center, High Quality Polyurethane Wheel Tread
Blue finish, Bearing—Ball Bearings.

Wheel surface: High-quality polyurethane

Wheel Center: cast iron core

Drawings are for reference only and may differ from the product

Technical Data

◉ Metric ○ Imperial

Wheel Diameter	50mm
Wheel Width	41.5mm
Wheel Bearing	Wheels With Ball Bearings
Plate Size	95 x 65mm
Bolt Hole Spacing	75 x 45mm
Plate Hole	12 x 9mm
Offset	17mm
Swivel Interference	108mm
Overall Height	74mm
Swivel Radius	54mm
Hardness Of Tread	87±5° Shore A
Load Capacity (Dynamic)	300kgs
Load Capacity (Static)	450kgs
Temperature	-20°C to +70°C
Fork Type	Swivel Caster
Stainless	N/A
Electrical Conductivity	N/A
Anti-Static	N/A
Weight	0.8kgs
Standard	ISO22883

Advantages at a glance

Rolling Resistance	● ● ● ● ●
Operating Noise	● ● ● ● ●
Floor Surface Preservation	● ● ● ● ●

Dimensions

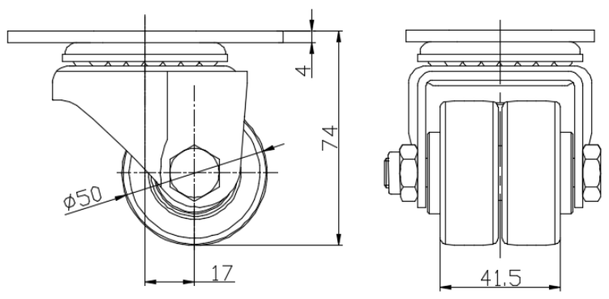

Mounting

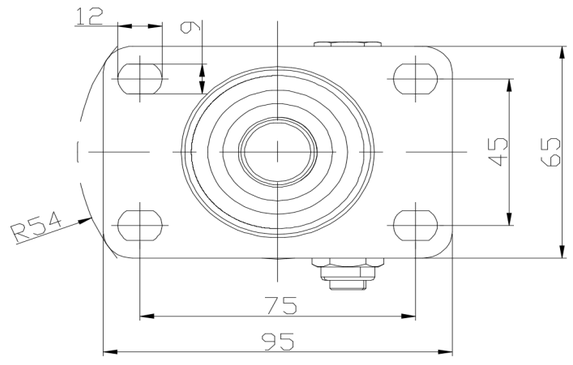

* For any deviation between metric and imperial spec, please refer to the metric spec.

© Copyright 2025 DershengInternational www.dersheng.com