Product Information Sheet

1109 Medium Duty/Low Profile Business Machine Caster Series

ZQPU (Milled Blue) Wheel Diameter × Wheel Width 50× 20（41.5） mm

EAN

YJ-11090200802073

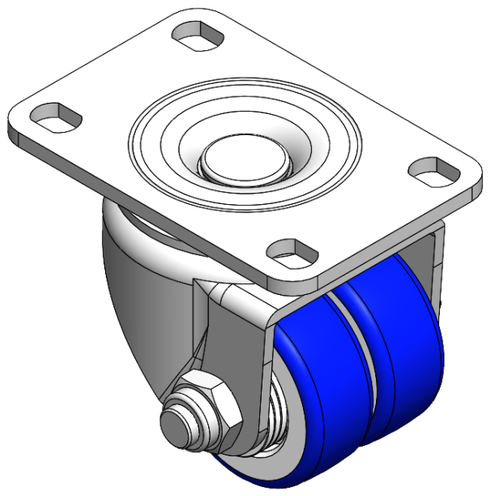

Picture may differ from original product

Portable Casters, Riveted and Stamping Top Plate—high-grade perforated design
Zine-Plated surface, Mounting Type - Top Plate device
Cast Iron Wheel Center, High Quality Polyurethane Wheel Tread
Blue finish, Bearing—Ball Bearings.

Wheel surface: High-quality polyurethane

Wheel Center: cast iron core

Drawings are for reference only and may differ from the product

Technical Data

◉ Imperial ○ Metric

Wheel Diameter	2 "
Wheel Width	1-11/16
Wheel Bearing	Wheels With Ball Bearings
Plate Size	3-13/16 " x 2-9/16 "
Bolt Hole Spacing	3 " x 1-13/16 "
Plate Hole	1/2 " x 23/64 "
Offset	11/16 "
Swivel Interference	4-5/16 "
Overall Height	3 "
Swivel Radius	2-3/16 "
Hardness Of Tread	87±5° Shore A
Load Capacity (Dynamic)	661lbs
Load Capacity (Static)	992lbs
Temperature	-4°F to +158°F
Fork Type	Swivel Caster
Stainless	N/A
Electrical Conductivity	N/A
Anti-Static	N/A
Weight	1.8lbs
Standard	ISO22883

Advantages at a glance

Rolling Resistance	● ● ● ● ●
Operating Noise	● ● ● ● ●
Floor Surface Preservation	● ● ● ● ●

Dimensions

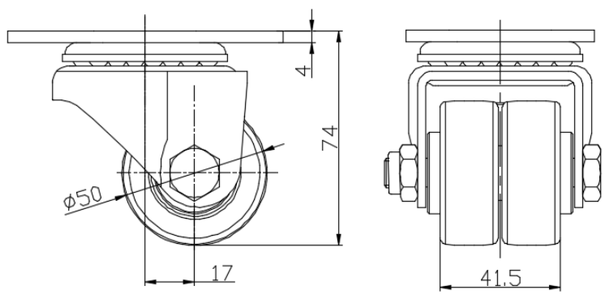

Mounting

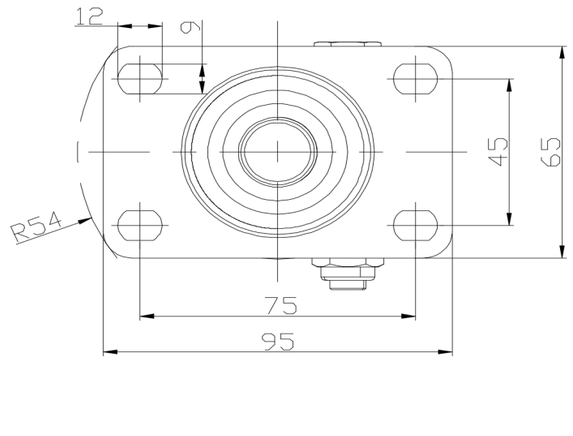

* For any deviation between metric and imperial spec, please refer to the metric spec.

© Copyright 2025 DershengInternational www.dersheng.com