Product Information Sheet

1109 Medium Duty/Low Profile Business Machine Caster Series

ZQPU (Milled Blue) Wheel Diameter × Wheel Width 50× 20（41.5） mm

EAN

YJ-11090200805023

Portable Casters, Threaded Stem Stamping Fork—3/8"-16
Zine-Plated surface, Mounting Type - Threaded Stem device
Cast Iron Wheel Center, High Quality Polyurethane Wheel Tread
Blue, Bearing—Ball Bearings.

Wheel surface: High-quality polyurethane

Wheel Center: cast iron core

Drawings are for reference only and may differ from the product

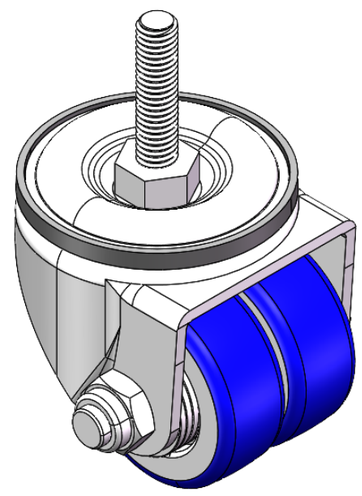

Picture may differ from original product

Technical Data

◉ Metric ○ Imperial

Wheel Diameter	50mm
Wheel Width	42.5mm
Wheel Bearing	Wheels With Ball Bearings
Threaded Stem	3/8 " -16
Threaded Length	38mm
Offset	17mm
Swivel Interference	94mm
Overall Height	70mm
Swivel Radius	47mm
Hardness Of Tread	87±5° Shore A
Load Capacity (Dynamic)	100kgs
Load Capacity (Static)	150kgs
Temperature	-20°C to +70°C
Fork Type	Swivel Caster
Stainless	N/A
Electrical Conductivity	N/A
Anti-Static	N/A
Weight	0.95kgs
Standard	ISO22883

Advantages at a glance

Rolling Resistance	● ● ● ● ●
Operating Noise	● ● ● ● ●
Floor Surface Preservation	● ● ● ● ●

Dimensions

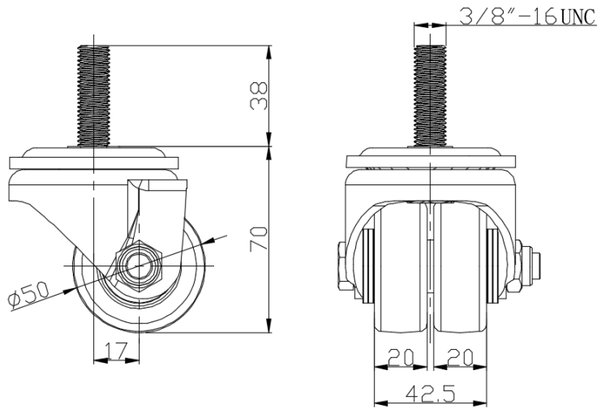

Mounting

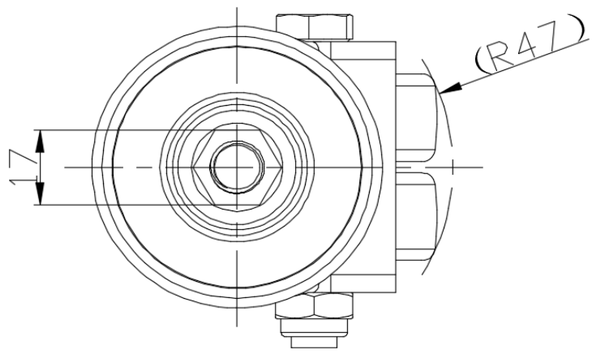

* For any deviation between metric and imperial spec, please refer to the metric spec.

© Copyright 2026 DershengInternational www.dersheng.com