# 1110-YOYO YOYO Series-Light Duty Twin Wheel Caster Series (All Plastic)

Yoyo Wheel (White dark gray) Wheel Diameter x Wheel Width 100 x 22mm

EAN

YJ-11100400246143



Picture may differ from original product

Drawings are for reference only and may differ from the product

## Technical Data

◉ Metric ○ Imperial

| | |
|---|---|
| Wheel Diameter | 100mm |
| Wheel Width | 68mm |
| Wheel Bearing | Wheels With Ball Bearings |
| Threaded Stem | 3/8 " -16 |
| Threaded Length | |

**Notice**
**C:\xampp\htdocs\derweb\der-1110-EN-YJ2025080910.php**
**1533**
: Undefined variable: mb033a in
on line
25mm

| | |
|---|---|
| Overall Height | |
| Hardness Of Tread | |
| Load Capacity (Dynamic) | |
| Load Capacity (Static) | |
| Temperature | |
| Stainless | N/A |
| Electrical Conductivity | N/A |
| Anti-Static | N/A |
| Weight | |
| Standard | |

## Advantages at a glance

| | |
|---|---|
| Rolling Resistance | ●●●●● |
| Operating Noise | ●●●●● |
| Floor Surface Preservation | ●●●●● |

## Dimensions

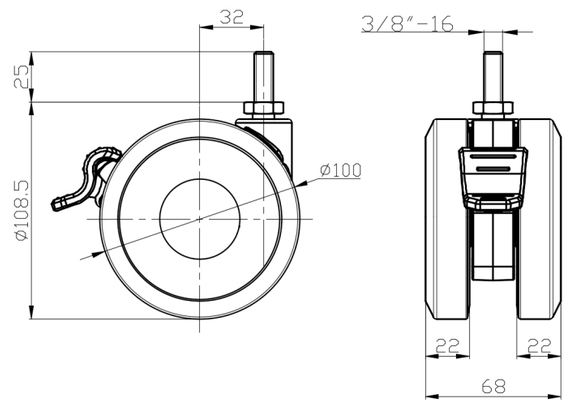


## Mounting

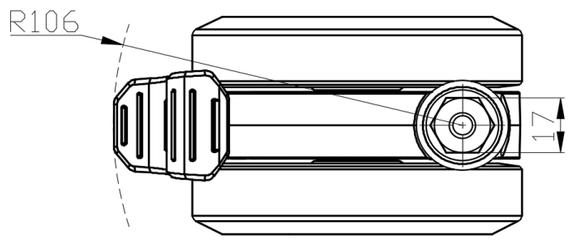


* For any deviation between metric and imperial spec, please refer to the metric spec.

© Copyright 2026 DershengInternational www.dersheng.com

**Warning**: A non-numeric value encountered in **C:\xampp\htdocs\derweb\der-1110-EN-YJ2025080910.php** on line **3133**

**Warning**: A non-numeric value encountered in **C:\xampp\htdocs\derweb\der-1110-EN-YJ2025080910.php** on line **3134**