1110-YOYO YOYO Series-Light Duty Twin Wheel Caster Series (All Plastic)

Yoyo Wheel (White dark gray) Wheel Diameter x Wheel Width 100 x 22mm

EAN

YJ-11100400246143



Drawings are for reference only and may differ from the product

Picture may differ from original product

Technical Data

◉ Imperial ○ Metric

Wheel Diameter	4 "
Wheel Width	2-3/4 "
Wheel Bearing	Wheels With Ball Bearings
Threaded Stem	3/8 " -16
Threaded Length	

Notice : Undefined variable: mb033a in **C:\xampp\htdocs\derweb\der-1110-EN-YJ2025080910.php** on line **1533**

Overall Height	
Hardness Of Tread	
Load Capacity (Dynamic)	
Load Capacity (Static)	
Temperature	
Stainless	N/A
Electrical Conductivity	N/A
Anti-Static	N/A
Weight	
Standard	

Advantages at a glance

Rolling Resistance	●●●●●
Operating Noise	●●●●●
Floor Surface Preservation	●●●●●

Dimensions

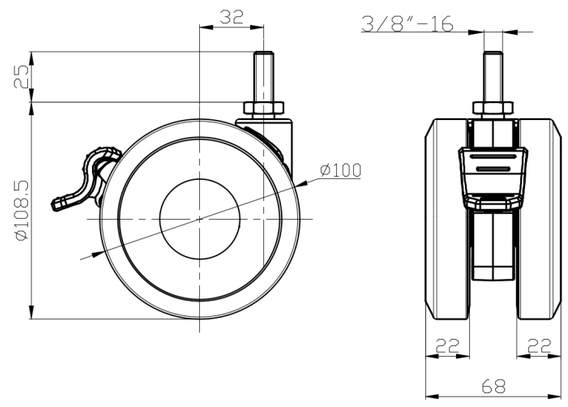

Mounting

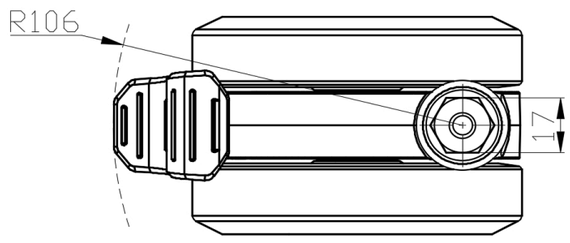

* For any deviation between metric and imperial spec, please refer to the metric spec.

© Copyright 2026 DershengInternational www.dersheng.com

Warning: A non-numeric value encountered in **C:\xampp\htdocs\derweb\der-1110-EN-YJ2025080910.php** on line **3133**

Warning: A non-numeric value encountered in **C:\xampp\htdocs\derweb\der-1110-EN-YJ2025080910.php** on line **3134**