Product Data Sheet

1111 Institutional Caster Series

AQPU (grey round) Wheel Diameter × Wheel Width 125 x 31mm

EAN

YJ-11110500602023

Swivel castor, Top Plate Riveted Stamping Fork - high-grade hole Surface Zine-Plated, Mounting Type - Top Plate Aluminum core, High Quality Polyurethane Wheel Tread Gray, Bearing - Ball Bearing.

Wheel tread: Made of high quality polyurethane

Wheel Center: Aluminum core

Drawings are for reference only and may differ from the product

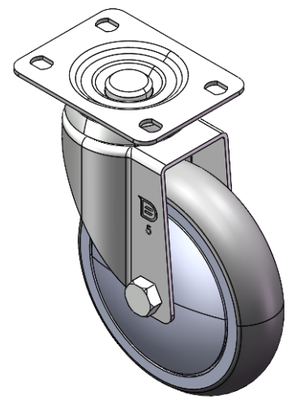

Picture may differ from original product

Technical Data

◉ Imperial ○ Metric

Wheel Diameter	5 "
Wheel Width	1-1/4 "
Wheel Bearing	Wheels With Ball Bearings
Plate Size	3-13/16 " x 2-7/8 "
Bolt Hole Spacing	
Plate Hole	1/2 " x 3/8 "
Offset	1-7/16 "
Swivel Interference	7-13/16 "
Overall Height	6-1/2 "
Swivel Radius	3-15/16 "
Hardness Of Tread	92±5° Shore A
Load Capacity (Dynamic)	507lbs
Load Capacity (Static)	761lbs
Temperature	-4°F to +158°F
Fork Type	Swivel Caster
Stainless	N/A
Electrical Conductivity	N/A
Anti-Static	N/A
Weight	2.3lbs
Standard	ISO22883

Advantages at a glance

Rolling Resistance	● ● ● ● ●
Operating Noise	● ● ● ● ●
Floor Surface Preservation	● ● ● ● ●

Dimensions

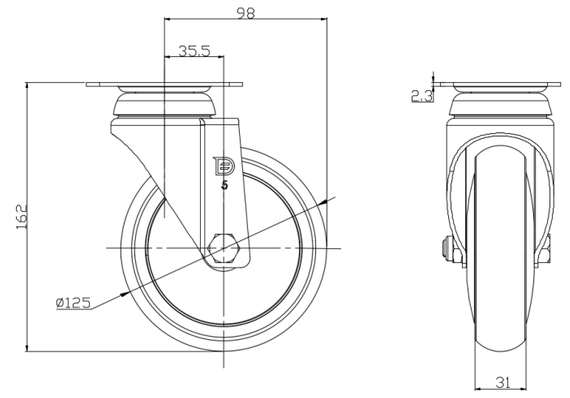

Mounting

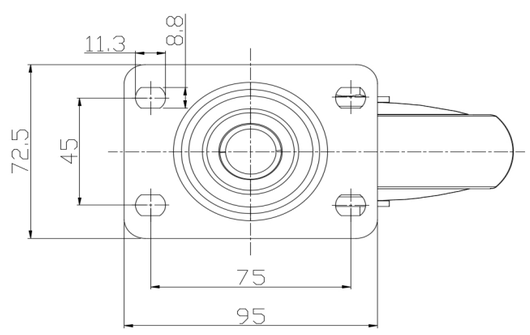

* For any deviation between metric and imperial spec, please refer to the metric spec.

© Copyright 2025 DershengInternational www.dersheng.com