1117 Blue Fork Pneumatic Caster Series

Flat Free Tire Wheel Diameter × Wheel Width 208 x53.5 mm

YJ-11170800434021

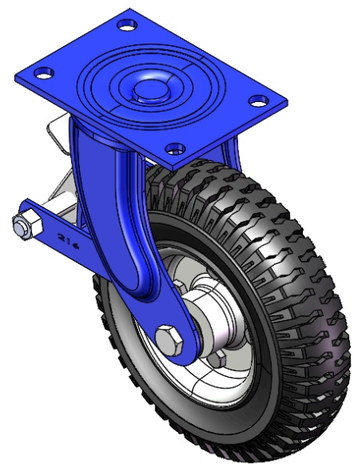

Drawings are for reference only and may differ from the product

Picture may differ from original product

Technical Data

◉ Metric ○ Imperial

Wheel Diameter	208mm
Wheel Width	53.5mm
Wheel Bearing	Wheels With Ball Bearings
Plate Size	144 x 105mm
Bolt Hole Spacing	120 x 75mm
Plate Hole	13mm
Offset	63mm
Swivel Interference	334mm
Overall Height	248mm
Swivel Radius	167mm
Hardness Of Tread	75±5° Shore D
Load Capacity (Dynamic)	150kgs
Load Capacity (Static)	225kgs
Temperature	-20°C to +80°C
Fork Type	Swivel Caster With Rear Brake
Stainless	N/A
Electrical Conductivity	N/A
Anti-Static	N/A
Weight	4.33kgs
Standard	ISO22883

Advantages at a glance

Rolling Resistance	●●●●●
Operating Noise	●●○○○
Floor Surface Preservation	●●○○○

Dimensions

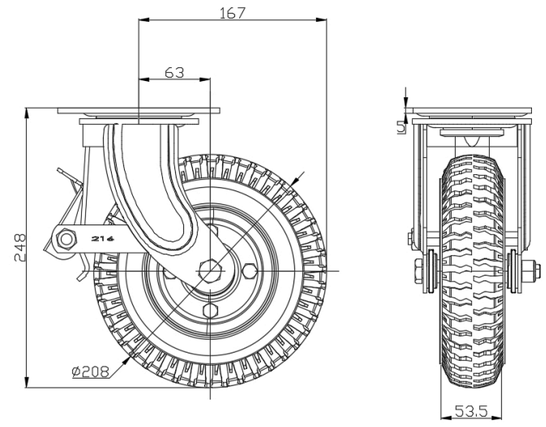

Mounting

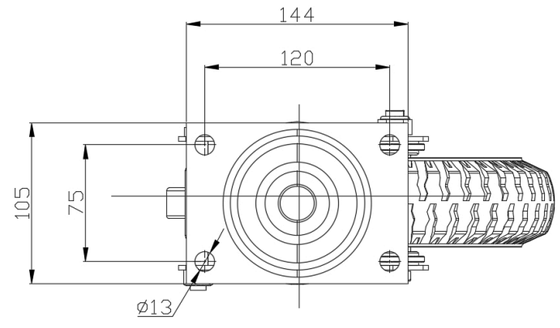

* For any deviation between metric and imperial spec, please refer to the metric spec.

© Copyright 2026 DershengInternational www.dersheng.com