1117 Blue Fork Pneumatic Caster Series

Flat Free Tire Wheel Diameter × Wheel Width 208 x53.5 mm

YJ-11170800434021

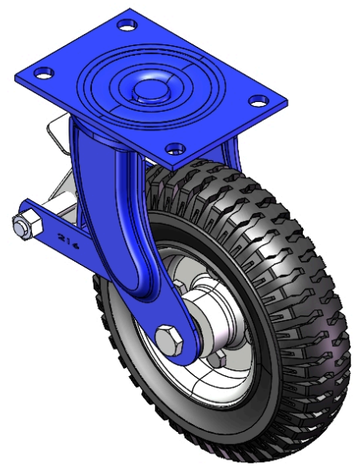

Picture may differ from original product

Drawings are for reference only and may differ from the product

Technical Data

◉ Imperial ○ Metric

Wheel Diameter	208mm
Wheel Width	53.5mm
Wheel Bearing	Wheels With Ball Bearings
Plate Size	5-3/4 " x 4-3/16 "
Bolt Hole Spacing	
Plate Hole	9/16 "
Offset	2-1/2 "
Swivel Interference	13-5/16 "
Overall Height	9-15/16 "
Swivel Radius	6-5/8 "
Hardness Of Tread	75±5° Shore D
Load Capacity (Dynamic)	331lbs
Load Capacity (Static)	496lbs
Temperature	-4°F to +176°F
Fork Type	Swivel Caster With Rear Brake
Stainless	N/A
Electrical Conductivity	N/A
Anti-Static	N/A
Weight	9.5lbs
Standard	ISO22883

Advantages at a glance

Rolling Resistance	●●●●●
Operating Noise	●●○○○
Floor Surface Preservation	●●○○○

Dimensions

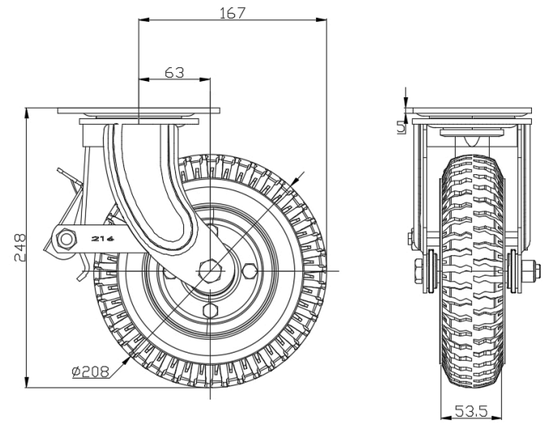

Mounting

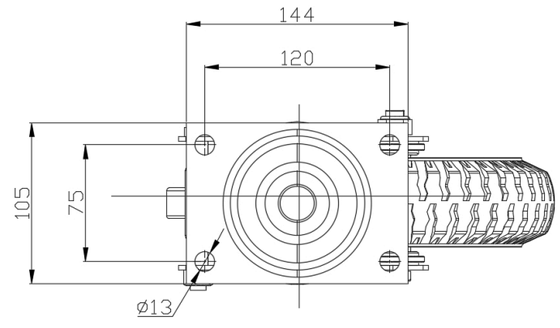

* For any deviation between metric and imperial spec, please refer to the metric spec.

© Copyright 2026 DershengInternational www.dersheng.com