1120 Single Raceway, Light Duty Caster Series

Rubber Wheel (Diameter × Width 40×17mm)

A

YJ-11200150061013

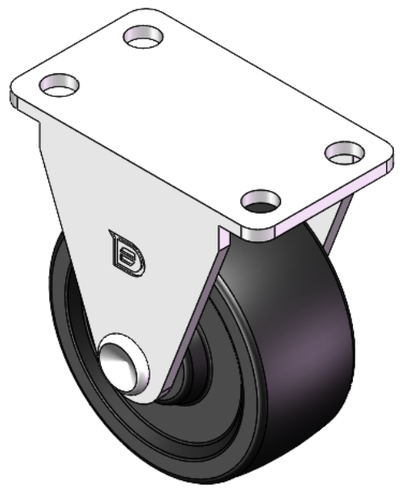

Drawings are for reference only and may differ from the product

Picture may differ from original product

Technical Data

◉ Imperial ○ Metric

Wheel Diameter	1-5/8
Wheel Width	11/16 "
Wheel Bearing	Wheel With Plain Bearing
Plate Size	1-7/8 " x 1-1/16 "
Bolt Hole Spacing	1-7/16 " x 5/8 "
Plate Hole	1/4 "
Overall Height	1-15/16 "
Hardness Of Tread	80±5° Shore A
Load Capacity (Dynamic)	44lbs
Load Capacity (Static)	66lbs
Temperature	-4°F to +248°F
Fork Type	Rigid Caster
Stainless	N/A
Electrical Conductivity	N/A
Anti-Static	N/A
Weight	0.2lbs
Standard	ISO22883

Advantages at a glance

Rolling Resistance	● ● ● ○ ○
Operating Noise	● ● ● ● ○
Floor Surface Preservation	● ● ● ● ○

Dimensions

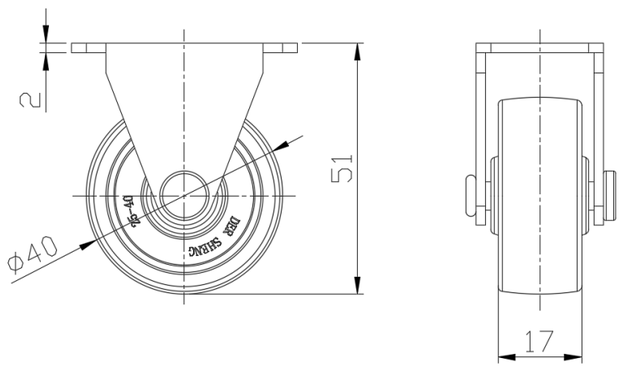

Mounting

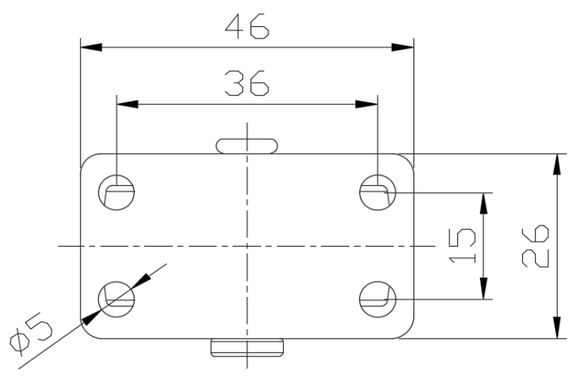

* For any deviation between metric and imperial spec, please refer to the metric spec.

© Copyright 2026 DershengInternational www.dersheng.com