1120 Single Raceway, Light Duty Caster Series

DERSHENG
Dersheng Casters Keep Rolling

Rubber Wheel (Diameter × Width 40×17mm)

A

YJ-11200150062013

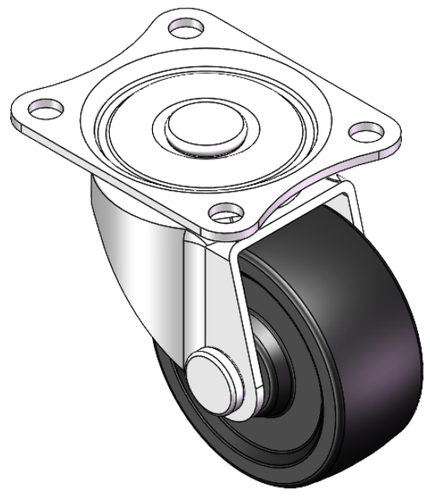

Drawings are for reference only and may differ from the product

Picture may differ from original product

Technical Data

◉ Metric ○ Imperial

Wheel Diameter	40mm
Wheel Width	17mm
Wheel Bearing	Wheel With Plain Bearing
Plate Size	46 x 38mm
Bolt Hole Spacing	36 x 28mm
Plate Hole	5mm
Offset	14mm
Swivel Interference	68mm
Overall Height	51mm
Swivel Radius	34mm
Hardness Of Tread	80±5° Shore A
Load Capacity (Dynamic)	20kgs
Load Capacity (Static)	30kgs
Temperature	-20°C to +120°C
Fork Type	Swivel Caster
Stainless	N/A
Electrical Conductivity	N/A
Anti-Static	N/A
Weight	0.08kgs
Standard	ISO22883

Advantages at a glance

Rolling Resistance	● ● ● ○ ○
Operating Noise	● ● ● ● ○
Floor Surface Preservation	● ● ● ● ○

Dimensions

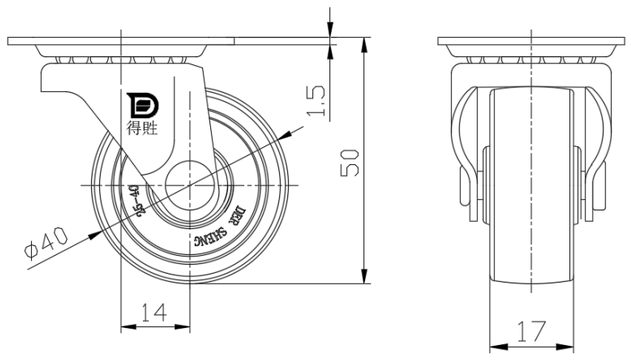

Mounting

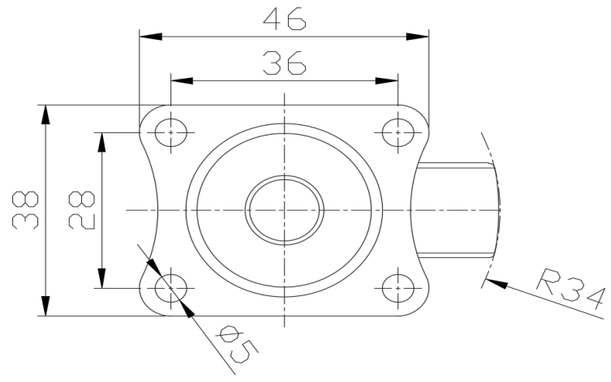

* For any deviation between metric and imperial spec, please refer to the metric spec.

© Copyright 2026 DershengInternational www.dersheng.com