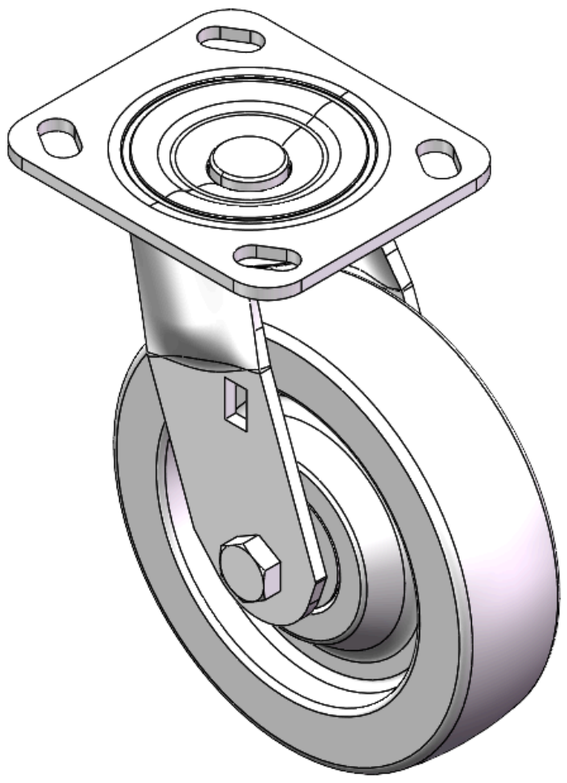

Picture may differ from original product



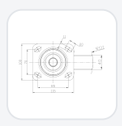

1124 1-1/2" Wide General Purposes Caster Series

MRC (Transparent) Wheel Diameter × Wheel Width 150 x 40mm

YJ-11240600072053 Copy model no.

Wheel Diameter	Load Capacity (Dynamic)	Overall Height	Wheel Bearing
150mm	**350kgs**	**189mm**	**Wheels With Ball Bearings**

Product descriptions are for reference only. The actual product shall prevail.

Product Data Sheet

Wheel Diameter	**150mm**	Wheel Width	**42mm**
Wheel Bearing	**Wheels With Ball Bearings**	Plate Size	**115 x 100mm**
Bolt Hole Spacing	**85 x 70mm**	Plate Hole	**20 x 11mm**
Offset	**39mm**	Swivel Interference	**222mm**
Overall Height	**189mm**	Swivel Radius	**111mm**
Hardness Of Tread	**75±5° Shore D**	Load Capacity (Dynamic)	**350kgs**
Load Capacity (Static)	**525kgs**	Temperature	**-20°C to +80°C**
Fork Type	**Swivel Caster**	Stainless	**N/A**
Electrical Conductivity	**N/A**	Anti-Static	**N/A**
Weight	**2.03kgs**	Standard	**ISO22883**

* For any deviation between metric and imperial spec, please refer to the metric spec.

Performance

Rolling Resistance ●●●●●	Operating Noise ●●○○○	Floor Surface Preservation ●●○○○

© 2026 DERSHENG CO., LTD. All rights reserved.